CONSTRUCTION OF COMMUNITY HALLS

TENDER NO: IREL/MK/ET/10/2026-27

IREL (India) Limited
आईआरईएल (इंडिया) लिमिटेड
(A Government of India Undertaking)

मणवालकुरिच्चि, कन्याकुमारी, जिला, तमिलनाडु - 629 252
Manavalakurichi, Kanyakumari Dist, Tamil Nadu - 629 252
फोन / Tel. : 04651 - 237255 / 237256 / 237257 / 237258 फैक्स / Fax : 04651 - 237220
पंजीकृत कार्यालय: प्लॉट नं. 1207, वीर सावरकर मार्ग, सिद्धिविनायक मंदिर के पास, प्रभादेवी, मुंबई - 400 028.
Regd. Office: Plot No.1207, Veer Savarkar Marg, Near Siddhivinayak Temple, Prabhadevi, Mumbai - 400 028.

CIN No. U15100MH1950GOI008187

Schedule of Tender

Tender No.	IREL/MK//ET/10/2026-27
Date of publishing of Tender document in IREL and CPP portal	16.10.2026. Interested agencies may view and download the Tender document containing the detailed terms & conditions, free of cost from the website https://www.etenders.gov.in/eprocure/app and https://www.irel.co.in. The bids are to be submitted as per procedure given in this Tender document.
Name of Work	Construction of Community Hall at (i) Sree Padmanaiyyan Temple Attinkarai, Manavalakurichi P.O.; (ii) Sree Attumadan Tamburan Coil, Hindu Oorali Samuthaya Munnetta Nala Sangam, Kalladivilai, Kadiapattinam; (iii) Nilliyamman Temple, Kattukadai, Palapallam P.O.; (iv) Arayar Samuthayam, Peachivilagam, Manavalakurichi; (v) Arulmigu Devi Mutharamman Temple, Aandarvilai, Manavalakurichi, (vi) Arulmigu Sree Tharma Sastha Thirucoil, Kunnancadu, Azhaganparai; (vii) Arulmigu Mondaikadu Amman Temple, Mondaikadu; (viii) Sree Ram Kovil Committee, Kovil Vilai, Midalam, Udayamarthandam
Type of Tender	Open Tender, Single Stage Two Bid System Two cover System
Tendering Mode: CPP Portal	Public tender (Two cover System) - PreQualification Bid - Financial Bid
Cost of Tender Document	₹1,770/- (In case bidders download the Tender document from the website then no need to pay TDC)
Earnest Money Deposit (EMD)	₹1,22,025/-
Date & time of Starting of bid	16.10.2026.
Last date submission of Pre-bid queries	-
Date of Pre-bid meeting	-
Bid Submission start date	16.10.2026.
Date of closing of bid for submission of Bids	31.10.2026, 14.00 Hrs
Date & time of opening of Cover 1	02.11.2026, 14.30 Hrs
Date & time of opening of Financial Bid	Shall be informed separately to the eligible bidders
Declaration of Successful Bidder	To be decided
Issuance of Letter of Intent (LoI)/Work order	To be decided
Estimated Cost	₹71,99,500/-
Validity of tender	120 days from bid due date
SD/PBG	5% of the contract value
Contact details of tender inviting authority	Shri G.K Chandra Guptan, CM – Tech. (Purchase & Stores) Mobile No. 9003681969 Phone 04651-237255-256 (Extn No. 04651-200402) Email: purchase-mk@irel.co.in IREL (India) Limited Manavalakurichi .PO., Kanyakumari District-629 252

DISCLAIMER

The information contained in this tender document (the **"TENDER"**) or subsequently provided to Bidder(s), whether verbally or in documentary or any other form, by or on behalf of IREL or any of its employees, is provided to Bidder(s) on the terms and conditions set out in this TENDER and such other terms and conditions subject to which such information is provided. The information provided is only for the information and reference of the Bidders.

This TENDER is not an agreement and is neither an offer by IREL to the prospective Bidder(s) or any other person. The purpose of this TENDER is to provide interested parties with information that may be useful to them in the formulation of their bid for participation in this TENDER. This TENDER includes statements, which reflect various assumptions and assessments arrived at by IREL in relation to the tender work. Such assumptions, assessments and statements do not purport to contain all the information that each Bidder may require. This TENDER may not be appropriate for all persons, and it is not possible for IREL, or its employees to consider the investment objectives, financial situation and particular needs of each party who reads or uses this TENDER. The assumptions, assessments, statements and information contained in this TENDER may not be complete, accurate, adequate or correct. Each Bidder should therefore, conduct its own investigations and analysis and should check the accuracy, adequacy, correctness, reliability and completeness of the assumptions, assessments, statements and information contained in this TENDER and obtain independent advice from appropriate sources.

Information provided in this TENDER to the Bidder(s) is on a wide range of matters, some of which may depend upon interpretation of law. The information given is not intended to be an exhaustive account of statutory requirements and should not be regarded as a complete or authoritative statement of law. IREL accepts no responsibility for the accuracy or otherwise for any interpretation or opinion on law expressed herein.

IREL, its employees and consultant make no representation or warranty and shall have no liability to any person, including any Bidder, under any law, statute, rules or regulations, principles of restitution or unjust enrichment or otherwise for any loss, damages, cost or expense which may arise from or be incurred or suffered on account of anything contained in this TENDER or otherwise, including the accuracy, adequacy, correctness, completeness or reliability of the TENDER and any assessment, assumption, statement or information contained therein or deemed to form part of this TENDER or arising in any way with qualification of Bidders for participation in the Bidding Process. IREL also accepts no liability of any nature whether resulting from negligence or otherwise howsoever caused arising from reliance of any Bidder upon the statements contained in this TENDER. IREL may, in its absolute discretion but without being under any obligation to do so, update, amend or supplement the information, assessment or assumptions contained in this TENDER.

The issue of this TENDER does not imply that IREL is bound to select and short-list qualified Bids for Price Bid stage or to appoint the Selected Bidder for the intended work, and IREL reserves the right to reject all or any of the Bids without assigning any reasons whatsoever.

The Bidder shall bear all its costs associated with or relating to the preparation and submission of its Bid including but not limited to preparation, copying, postage, delivery fees, expenses associated with any demonstrations or presentations which may be required by IREL or any other costs incurred in connection with or relating to its Bid. All such costs and expenses will remain with the Bidder and IREL shall not be liable in any manner whatsoever for the same or for any other costs or other expenses incurred by a Bidder in preparation or submission of the Bid, regardless of the conduct or outcome of the Bidding Process.

TABLE OF CONTENTS:

Sl. No.	Contents	Page No.
1.	General Instruction to bidder W.R.T. participation in the e-tender event	5-6
2.	Introduction	6
3.	Pre-Qualification Criteria	7-8
4.	Scope of Work with Technical Specification	8-15
5.	Bill of quantity	15-18
6.	Preparation and submission of online bid	18-19
7.	Special Terms and Condition	19-20
8.	General Conditions of the Contract	20-57
9.	Annexure – I Declaration of Non-Blacklisting	58
10.	Annexure – II Tender Acceptance Letter	59
11.	Annexure – III Certificate from practicing Chartered Accountant for eligible works	60
12.	Annexure – IV Particulars of bidder	61
13.	Annexure – V Requirement details of the tender document	62
14.	Annexure – VI EMD Declaration	63
15.	Annexure – VII Self Certification under preference to Make in India order certificate	64
16.	Annexure – VIII Annexure to Bid Form: Eligibility Declarations	65
17.	Annexure – IX Price Bid format	66-69
18.	Annexure – X Contractor Enrolment / Registration Form	70
19.	Annexure – XI Performa for Bank Guarantee for Earnest Money Deposit	71
20.	Annexure – XII Performa for BG towards Security Deposit/ Performance Bank Guarantee	72
21	Drawings	73-79

I. GENERAL INSTRUCTIONS TO BIDDERS W.R.T PARTICIPATION IN THE E-TENDERING EVENT

INSTRUCTIONS FOR ONLINE BID SUBMISSION

The bidders are required to submit soft copies of their bids electronically on the CPP Portal, using valid Digital Signature Certificates. The instructions given below are meant to assist the bidders in registering on the CPP Portal, prepare their bids in accordance with the requirements and submitting their bids online on the CPP Portal.

More information useful for submitting online bids on the CPP Portal may be obtained at https://etenders.gov.in/eprocure/app.

REGISTRATION

1) Bidders are required to enrol on the e-Procurement module of the Central Public Procurement Portal (URL: https://etenders.gov.in/eprocure/app) by clicking on the link "Online bidder Enrolment" on the CPP Portal which is free of charge.

2) As part of the enrolment process, the bidders will be required to choose a unique username and assign a password for their accounts.

3) Bidders are advised to register their valid email address and mobile numbers as part of the registration process. These would be used for any communication from the CPP Portal.

4) Upon enrolment, the bidders will be required to register their valid Digital Signature Certificate (Class II or Class III Certificates with signing key usage) issued by any Certifying Authority recognized by CCA India (e.g. Sify / nCode / eMudhra etc.), with their profile.

5) Only one valid DSC should be registered by a bidder. Please note that the bidders are responsible to ensure that they do not lend their DSCs to others which may lead to misuse.

6) Bidder then logs in to the site through the secured log-in by entering their user ID / password and the password of the DSC / e-Token.

SEARCHING FOR TENDER DOCUMENTS

1) There are various search options built in the CPP Portal, to facilitate bidders to search active tenders by several parameters. These parameters could include Tender ID, Organization Name, Location, Date, Value, etc. There is also an option of advanced search for tenders, wherein the bidders may combine a number of search parameters such as Organization Name, Form of Contract, Location, Date, Other keywords etc. to search for a tender published on the CPP Portal.

2) Once the bidders have selected the tenders they are interested in, they may download the required documents / tender schedules. These tenders can be moved to the respective 'My Tenders' folder. This would enable the CPP Portal to intimate the bidders through SMS / e-mail in case there is any corrigendum issued to the tender document.

3) The bidder should make a note of the unique Tender ID assigned to each tender, in case they want to obtain any clarification / help from the Helpdesk.

PREPARATION OF BIDS

a. Bidder should take into account any corrigendum published on the tender document before submitting their bids.

b. Please go through the tender advertisement and the tender document carefully to understand the documents required to be submitted as part of the bid. Please note the number of covers in which the bid documents have to be submitted, the number of documents - including the names and content of each of the document that need to be submitted. Any deviations from these may lead to rejection of the bid.

c. Bidder, in advance, should get ready the bid documents to be submitted as indicated in the tender document / schedule and generally, they can be in PDF / XLS / RAR / DWF/JPG formats. Bid documents may be scanned with 100 dpi with black and white option which helps in reducing size of the scanned document.

d. To avoid the time and effort required in uploading the same set of standard documents which are required to be submitted as a part of every bid, a provision of uploading such standard documents (e.g. PAN card copy, annual reports, auditor certificates etc.) has been provided to the bidders. Bidders can use "My Space" or ''Other Important Documents'' area available to them to upload such documents. These documents may be directly submitted from the "My Space" area while submitting a bid and need not be uploaded again and again. This will lead to a reduction in the time required for bid submission process.

SUBMISSION OF BIDS

1) Bidder should log into the site well in advance for bid submission so that they can upload the bid in time i.e., on or before the bid submission time. Bidder will be responsible for any delay due to other issues.

2) The bidder has to digitally sign and upload the required bid documents one by one as indicated in the tender document.

3) Bidders are requested to note that they should necessarily submit their financial bid in the format provided and no other format is acceptable. If the price bid has been given as a standard BoQ format with the tender document, then the same is to be downloaded and to be filled by all the bidders. Bidders are required to download the BoQ file, open it and complete the white colored (unprotected) cells with their respective financial quotes and other details (such as name of the bidder). No other cells should be changed. Once the details have been completed, the bidder should save it and submit it online, without changing the filename. If the BoQ file is found to be modified by the bidder, the bid will be rejected.

4) The server time (which is displayed on the bidders' dashboard) will be considered as the standard time for referencing the deadlines for submission of the bids by the bidders, opening of bids etc. The bidders should follow this time during bid submission.

5) All the documents being submitted by the bidders would be encrypted using PKI encryption techniques to ensure the secrecy of the data. The data entered cannot be viewed by unauthorized persons until the time of bid opening. The confidentiality of the bids is maintained using the secured Socket Layer 128 bit encryption technology. Data storage encryption of sensitive fields is done. Any bid document that is uploaded to the server is subjected to symmetric encryption using a system generated symmetric key. Further this key is subjected to asymmetric encryption using buyers / bid openers public keys. Overall, the uploaded tender documents become readable only after the tender opening by the authorized bid openers.

6) The uploaded tender documents become readable only after the tender opening by the authorized bid openers.

7) Upon the successful and timely submission of bids (i.e. after Clicking "Freeze Bid Submission" in the portal), the portal will give a successful bid submission message & a bid summary will be displayed with the bid no. and the date & time of submission of the bid with all other relevant details.

8) The bid summary has to be printed and kept as an acknowledgement of the submission of the bid. This acknowledgement may be used as an entry pass for any bid opening meetings.

Contact person of Tendering Authority IREL (India) Limited, Manavalakurichi.

N A M E	email-id	Mobile No./Landline No.
Smt. S. Latha, Dy. Manager -Technical (Purchase)	purchase-mk@irel.co.in	+91 9442525813
Shri S.P. Ganeshan, CM – Tech (Civil & EME)	spganeshan@irel.co.in	+ 91 9787778700

NB:

- **Bidders may please note that they are required to upload all the documents as called for in the tender document in order to enable them to be eligible for considering their price bid opening event.**

II. INTRODUCTION

IREL (India) Limited (the "IREL"), a Mini-Ratna Category-I company, is a Public Sector Undertaking of the Government of India under the Administrative Control of the Department of Atomic Energy. The company is engaged in mining and separation of atomic minerals and produces different rare earth compounds. The operating units of the company are located at Chavara, Kerala; Manavalakurichi, Tamil Nadu; Chhatarpur, Odisha and Aluva, Kerala. The corporate office is located at Mumbai.

III. PRE-QUALIFICATION CRITERIA

To pre-qualify in this Bid, the Bidder shall fulfill the following: -

S. No.	PQ requirement	Documents required (As applicable)
1	Experience of having successfully completed similar works during last 7 years ending 30th June 2026 and the same should be either of the following. The tenderers shall submit copy of work order executed along with satisfactory completion certificate from concerned authority/ department/ organization for similar works (documents to be submitted endorsing work experience). a. Three similar works, each costing not less than ₹28,79,800/- (incl. GST 18%). (OR) b. Two similar works, each costing not less than ₹35,99,750/- (incl. GST 18%). (OR) c. One similar work, costing not less than ₹57,59,600/- (incl. GST 18%). **Definition of similar works:** Similar works means works involving Construction/ Maintenance of any type of Civil works/Steel structural works.	• Work order with completion certificate.
2	Financial Capability: Average annual financial turnover during the last 3 years, ending 31st March 2025, should be at least **₹21,59,850/-** (incl. GST 18%). (Copies of profit & loss account and balance sheets for the last 3 years are to be submitted) or IT return duly filed duly audited by statutory auditor.	Financial Capability: Copies of profit & loss account and balance sheets for the last 3 years are to be submitted or IT return duly filed duly audited by statutory auditor.
3	Blacklisting: The Bidder should not have been blacklisted as on the bid submission date by any Public Sector Undertaking (PSU) / Central or State Government in India / Central or State Government undertaking.	Self-certified letter stating that the bidder has not been blacklisted by an Authorized Signatory on the company's original letter head with signature and seal

NB: Pre-qualification shall be carried out based on the documents submitted by the bidders for past performance, technical and financial capability, and shall be subject to verification, if required.

Note:

1. **The bidder should have its Head Office/Branch office in Tamilnadu/Kerala to ensure smooth monitoring of jobs. Valid Proof/documents shall be submitted.**
2. In the absence of receipt of documents meeting to Pre-qualification criteria, the offer will not be considered under any circumstances.
3. Relaxation in prior turnover and prior experience shall be given to MSEs / Start-ups (as defined by Department of Industrial Policy and Promotion) as per Government Circular / Guidelines subject to meeting of quality and technical Specification.
4. The offers of the bidders who have defaulted in the past in execution of the contracts or in complying with the obligations as per the contract shall not be considered.
5. **Traders/ distributors/ sole agent/ Works Contract are excluded from the purview of the Procurement Policy for Micro and small Enterprises, 2012 (as amended time to time).**
6. **Concurrent commitment:**

   The bidder has to submit complete list of concurrent commitments on all jobs under execution by them, as per format given below, which will be taken into account to assess the spare capacity available with the bidder. If the annualized concurrent commitments of the bidder plus annualized estimated value of the work exceeds four times the average annual financial turnover during the last three financial years of the bidder, then the bid of such a bidder shall not be considered for further evaluation.

   Concurrent commitment of the bidder shall be evaluated as on the last day of the Month previous to bid due date, based on the confirmation/declaration of the bidders that they have disclosed all works being executed by them. Bidders shall exclude all stalled project for which there is no progress in last one year giving reason for no progress considering above cut-off date. In case any adverse report / complaint are received against bidder and on enquiry found correct, offer shall be rejected and bidder shall be liable for appropriate legal action.

Sr. No	Full postal address of client and Name of Officer-In-Charge	Description of the Work	Value of Contract Rs. P.	Date of Commencement of Work	Scheduled Completion Period	% Completion as on date	Remarks

7. Performance Competence.

IREL reserves the right to use in-house information for assessment of Bidder's capability. Previous and Present Performance of contractors at IREL units shall be considered while evaluating their offers. In case of poor performance, the offer from such bidders shall not be evaluated.

IV. SCOPE OF WORK WITH TECHNICAL SPECIFICATION

1. SCOPE OF WORK:

Construction of Community Hall at (i) Sree Padmanaiyyan Temple Attinkarai, Manavalakurichi P.O.; (ii) Sree Attumadan Tamburan Coil, Hindu Oorali Samuthaya Munnetta Nala Sangam, Kalladivilai, Kadiapattinam; (iii) Nilliyamman Temple, Kattukadai, Palapallam P.O.; (iv) Arayar Samuthayam, Peachivilagam, Manavalakurichi; (v) Arulmigu Devi Mutharamman Temple, Aandarvilai, Manavalakurichi, (vi) Arulmigu Sree Tharma Sastha Thirucoil, Kunnancadu, Azhaganparai; (vii) Arulmigu Mondaikadu Amman Temple, Mondaikadu; (viii) Sree Ram Kovil Committee, Kovil Vilai, Midalam, Udayamarthandam as per the following specification and as per the direction of Engineer-in-charge.

1. **Dismantling and removal of R.R.** masonry/brick masonry/plain cement concrete work, etc. height upto 4.5m and dumping the debris within a lead of 500m by means of manually / mechanically, etc. complete as per specification and as directed by the Engineer-in-charge.
2. **Dismantling and removal of RCC foundation**/column/slab/beam, etc. in all heights upto 4.5m including all necessary scaffolding and dumping the debris within a lead of 500m by means of manually/mechanically, etc., complete as per specification and as directed by the Engineer-in-charge.
3. **Earthwork excavation** for foundation in all types of loose/hard soil and depositing the spoils with an initial lead of 20m and lift upto 2m including refilling etc. by means of manually / mechanically complete as per specification and as directed by the Engineer-in-charge.
4. **Supplying and filling of gravel** of approved quality above the earth surface with watering, levelling works, compaction and consolidating, including necessary anti-termite treatment, etc. by means of manually/ mechanically complete as per specification and as directed by the Engineer-in-charge.
5. **Supplying, providing and laying soling stone 230mm thick** over the existing sub base/sub grade including levelling and consolidation to form a compact surface using hard blue granite soling stone with hand packing, wedging them tightly and filling the voids with loose sand, watering and sweeping the sand into the joints so that the hole is formed as solid mass, etc. complete as per standard specification and as per the direction of Engineer-in-charge.
6. **Supplying, providing and laying PCC 1:4:8 mix** for foundation/ flooring work using 40mm and below grade hard blue granite jelly including all form works, mixing, laying, compaction, consolidation and curing, etc. complete as per standard specifications and as directed by the Engineer-in-charge.
7. **Supplying, providing and laying PCC 1:2:4 mix** for foundation/ flooring work/kerb wall drainage wall using 20mm and below grade hard blue granite jelly including all form works, mixing, laying consolidation and curing, etc. complete as per standard specifications and as directed by the Engineer-in-charge.
8. **Supplying, providing & laying RR masonry** foundation/wall/retaining wall in cement mortar 1:6 for construction of wall using hard blue granite stone, etc. complete from 2.5 m below ground level to 4.5m height above ground level with neat finishing including proper pointing & necessary scaffolding work etc. complete as per standard specifications and as directed by the Engineer-in-charge.
9. **Supplying, providing and laying brick masonry in CM 1:6** using well burnt country brick of minimum size 22.9x11.2x7cm for foundation/kerb wall/wall upto 4.5m height from ground level including all scaffolding, staging, curing, etc. complete complying with standard specifications and as directed by the Engineer-in-charge.
10. **Supplying, providing and laying pre-cast concrete kerb stone** of minimum size 450x150x300mm laid along the edges of floor/kerb wall/pavements upto 4.5m height from

ground level including necessary grouting of joint, all scaffolding, staging, curing, etc. complete complying with standard specifications and as directed by the Engineer-in-charge.

11. **Supplying, providing and fixing twisted reinforcement IS 1786 HYSD bars** Fe500D / Fe550D (TMT bars - TATA/ Agni/ JSW) including fabrication, cutting, bending, cold tying, with overlapping to the standard length wherever necessary and placing the reinforcement in position as per the direction of Engineer-in-charge including binding, provision of spacer bars, cover blocks and all other incidental charges, necessary scaffolding, staging, safety arrangements, etc. complete for all RCC works (item No. 12) upto 4.5m height as per standard specification and as per the direction of Engineer-in-charge.
12. **Supplying, providing and laying cement concrete 1:1.5:3 for RCC works** height upto 4.5m using 20mm and below grade hard blue granite jelly with specified reinforcement (rate excluding the cost of reinforcement) and all mixing, laying, compaction, leveling, consolidation and curing, etc., including the cost of centering/shuttering work, necessary scaffolding, staging, safety arrangements, etc. complete as per the specification and as per the direction of Engineer-in-charge.
13. **Supplying, plastering with CM 1:4 mix** 15mm thick one coat floated hard & trowelled smooth etc for floors & walls upto 4.5m height with neat finishing and necessary grouting, scaffolding, staging, safety arrangements, etc. and mix with water proofing compound (Sika/Perma), fibre mesh wherever required, etc. complete complying with standard specifications and as directed by the Engineer-in-charge.
14. **Supplying, plastering with CM 1:3 mix** 12mm thick one coat floated hard & trowelled smooth for RCC beam, column, ceiling, wall & floor upto 4.5m height with neat finishing and necessary grouting including all scaffolding, fibremesh wherever required, etc. complete complying with standard specifications and as directed by the Engineer-in-charge.
15. **Supplying, fabricating and fixing of required size ISI standard [YST 310 grade] heavy type GI round / square/ rectangular pipe** (Jindal/Kalinga) at all heights for roof truss, side cladding, shed, gate & partition, etc. including cutting, welding, grinding with necessary MS foundation bolt of size M16 Dia and 500 mm depth for placing with encasing/pocket hole with required template & 12mm thick base plate at bottom (foundation) and top 10mm thick base plate (joint area of GI pipe and roof truss) including proper binding/welding, grouting of foundation bolts with neat finishing etc. and painting the pipe with two coat with 1st quality epoxy smoke grey paint of approved shade (Asian/Berger/Nippon) over a coat of epoxy zinc-chromate/ zinc-phosphate primer (Asian/Berger/Nippon), including necessary scaffolding, safety arrangements, etc. complete as per specification and as per the direction of Engineer-in-charge.
16. **Supplying, providing and fixing of roof sheet with 0.47mm thick powder coated shee**t/ powder coated end curved / plain sheet [TATA - Durashine/JSW colouron+ (blue/red/grey)] at all heights with riveted joint/necessary fixing arrangements to suit the existing M.S. angle /channel, purlin, GI pipes, etc.including necessary ridges, UPVC rain water gutter around the shed, scaffolding, safety arrangements with all conveyance charges, loading/ unloading charges, etc. complete as per standard specification and as directed by Engineer-in-charge. (Minimum required overlapping is 15cm).
17. **Supplying, fabricating and fixing of required size ISI standard GI TATA Structura pipes** Square/ Rectangular/Circular of thickness 2mm-10mm for roof, side cladding, shed, upto 15m height etc. including cutting, welding, grinding, bolt arrangements with neat finishing and necessary scaffolding, safety arrangements, etc. complete as per specification and as per the direction of Engineer-in-charge. (YST 310 grade- Square & Rectangular: IS: 4923 & Circular: IS: 1161/IS3601).
18. **Supplying, providing and fixing of roof sheet with 2.8mm to 3.00mm thick UPVC** corrugated/ trafford/ trapezoidal roof sheet (Loyid/Tetto Colour/Sun-Arch/Sky Tech) Colour (blue/ green/ white/red/grey) at all heights with UPVC self-drilling screws with end cap are heavy-duty fasteners (2 nos. per m) to suit the existing M.S. angle/channel, purlin, GI pipes (for fixing bolt hole to be made with drilling machine only), including fixing the screw top covering with grease and end cap with necessary UPVC roof ridges including UPVC rain water gutter around the shed with necessary fitting, etc. and scaffolding, safety arrangements with all conveyance charges, loading/ unloading charges, etc. complete as per standard specification and as directed by Engineer-in-charge. (Minimum required overlapping is 15cm).
19. **Supply of paints and painting two coat with emulsion paint** (Asian/Berger/Nippon) of approved shade for the surface of the buildings over a coat of wall primer (Asian, Berger, Nippon) upto 15m height from ground level, including thorough scrapping, cleaning, removal of dirt of existing surface, all tools & tackles, sandpaper and scaffolding arrangements, and

applying crack filler/wall putty touch-up works wherever required etc. complete as per specification and as directed by the Engineer-in-charge.

20. **Supply of paints and painting two coat with 1st quality enamel / touch wood paint** of approved shade (Asian/ Berger/ Nippon) matching to the existing for all doors, windows, false ceiling, pipes etc. over a coat of wood sealer/primer and putty wherever required including thorough cleaning and removal of dirt and necessary scaffolding arrangements, upto 15m heights, etc. complete as per specification and as directed by the Engineer-in-charge.
21. **Supplying and fixing of 6kg PVC collecting pipe** (110mm dia) (Finolex/Ashirvad) at the end of rainwater collecting bowl with suitable powder coated clamps (2-5mm thick) and necessary fittings elbow, bend, coupling, solvent cement, scaffolding arrangements, etc. complete as per the direction of Engineer-in-charge.
22. **Supplying, providing and laying with 9mm thick vitrified-Marbonite double charge**/matte finish tiles of size 1200mmx 600mm (Kajaria/ Somania /Qutone brand) with Cement Mortar 1:2 and pointing, (apply spacer joint, epoxy joint-wherever required) including finishing the joint and pointing flush with the surface, etc. complete as per specification and as directed by Engineer-in-charge.
23. **Supplying, providing and finishing the floor with 9mm thick Anti-skid ceramic tiles** (Somania/ Kajaria/ Qutone make) of size 300mm x 300mm of approved quality and shade in CM 1:3 thick and pointing the tiles with matching colour cement, etc. complete as per the direction of the Engineer-in-charge.
24. **Supplying, providing and fixing 50/60mm thick coloured (red/yellow/black/Grey)** square/Zig-zag/ Hexagon/ Rectangle shape concrete paver block of size 200x100mm / 150x300mm /250x100mm / 200x120mm/ 220x270mm/ 200x200mm pattern floor, bottom laying with 6mm jelly of 50mm thick over the earth surface including levelling the earth surface with neat finishing, side packing etc. complete as per the specification and as per the direction of the Engineer-in-charge.
25. **Supplying, providing, laying and fixing of Stainless Steel hand rails** for staircase using square/ circular of size 50mm 304L Grade Stainless Steel pipe (top & vertical pillar) of 1.4mm thick will be provided with tubular supports made of 304L Grade Stainless Steel pipe of 25mm dia of 1.4mm thick welded to the railing (3 rows c/c & vertical supports with necessary space) and the supports will be grouted into the surface area with 93.00mm thick Stainless Steel circular base plate of 304 Grade. The rate shall included for grouting into concrete with necessary supporting arrangements the hand rail in floor polishing buffing, bonding, cutting, grinding, conveyance, welding charges, etc. complete as per the standard specifications and as per the direction of Engineer-in-charge.
26. **Supplying, providing, laying and fixing electrification concealed** (polythene pipe)/open point with required wire (make: Finolex/ Havells/Polycab), switch box (metal box-Legrand) switches (Make: Hi-fi) & 16Ams socket with all required necessary fittings including chipping, routing, clamping and all other incidental charges, etc. complete as per the specification and as per the direction of Engineer-in-charge.
27. **Supplying, providing and fixing of Led tube light 22W** (Havels/Wipro Garnet) with all required necessary fittings etc. complete as per the specification and as per the direction of Engineer-in-charge.
28. **Engagement of Artist** for artistic work in the furniture/gates/name board/building wall, etc. including scrapping & cleaning the surface and marking, etc. complete as directed by the Engineer-in-charge.
29. **Engagement of Fitter** for miscellaneous works complete as directed by the Engineer-in-charge.
30. **Engagement of Mason** for miscellaneous works complete as directed by the Engineer-in-charge.
31. **Engagement of labour (Mazdoor)** for miscellaneous work complete as directed by the Engineer-in-charge.

2. EVALUATION:

Evaluation will be done on OVERALL LOWEST VALUE (L1) basis based on the Price bid.

3. SPECIFIC INSTRUCTION:

a. Bidders before submitting their tenders, are advised to inspect and examine site, its condition, the surroundings and satisfy themselves regarding the nature of the job (i.e. work details including all the technical data), ground, the form and nature of the site, the means of access to the site, the accommodation they may require and in general shall themselves obtain all necessary information with regard to risks, contingencies and other circumstances which may

influence or affect their tender including security and safety regulations in vogue, at work site /sites. Tenderer shall be deemed to have full knowledge of the site whether he inspects it or not and no extra claim consequent on any misunderstanding or otherwise shall be allowed.

b. **The contractor is deemed to have satisfied himself before tendering as to the correctness and sufficiency of his tender for works and of the rates and prices quoted and cover all his obligations under the contract apart from all matters and things necessary for the proper completion of the work. The rate quoted shall be inclusive of all the cost of materials to be procured by the contractor and also labour, tools, plants, fuel, consumables, etc.**

c. **The quantities if any given or indicated in the tender are those upon which the approximate estimated cost of work are based but they are subject to alterations, omissions, deduction and additions and not necessarily show the actual quantities of work to be done, which may vary. Wherever rates are quoted, the rate shall be firm for such variations as well.**

d. The bidder shall give the details of experience and qualification of the key resource person/s who shall supervise the work. It is advised that the work is executed under supervision of a person who is qualified and experienced in similar works.

4. <u>INSTRUCTION TO THE CONTRACTOR</u>:

a. Providing all necessary qualified, skilled and experienced personnel including supervisor [Diploma in Civil (5 years experience)/Engineer Civil (3 years experience)] for accomplishment of jobs within the allotted time period. Submission of list of pool of personnel who shall be deployed at site, establish their identities, competencies, licenses and obtain all security and safety clearance as required prior to their deployment. Documentary proof if any required must be submitted. Ensuring that only those personnel approved by company are engaged for the work.

b. The contractor shall at their cost make his own arrangements for the stay of his personnel.

c. The contractor shall arrange all safety appliances to his labourer and supervisor i.e. required PPEs like shoe, helmet, safety net/rope grab/ roof top walk ladder, safety belt, etc.

d. The contractor shall arrange all tools and tackles, consumables in order to carry the works specified in the schedule. Safe and storage of materials shall be the responsibility of the contractor.

It shall be the responsibility of the contractor to ensure safe and proper custody of all the items dismantled and stored at worksite, during handling and transportation. IREL (India) Limited will not be responsible for any loss or damage.

e. The contractor shall arrange all equipments like welding machine, welding electrodes, gas accessories, drilling machine with tools, etc. for site works. He shall also arrange tools like pipe wrenches, spanners, etc. and lifting equipments like derrick chain and pulley blocks, accessories for scaffolding lifting chains, ropes, etc. required for the complete work.

f. **Any material brought inside the plant/work site shall be with due acknowledgement and documentation with IREL (India) Limited officials**.

g. Return of unused material supplied by the contractor, tools, etc. shall be with due authorization from Engineer-in-charge.

h. The contractor shall use tubular steel for scaffolding for all heights more than 3 metre height as approved by the Engineer-in-charge. All scaffolding shall be securely supported or suspended and wherever necessary be properly braced to ensure stability.

5. <u>OTHER SPECIFIC INSTRUCTION TO THE CONTRACTOR:</u>

a. Proper curing should be carried out as per the standard specification and instruction of Engineer-in-charge.

b. Supply of Cement as required for work is under contractor's scope and hence all the rates of items should be quoted inclusive of cement cost (Only DALMIA/ ACC/ RAMCO/ SANKAR/ L&T /BIRLA cement confirming to IS:269/IS:8112 (OPC) 33 & 43 grade/1489 (PPC) shall be used for the work). Only current batch of cement or at best two months old stock from the date of manufacturing shall be allowed to be used at site.

c. For RCC works more than 5 (five) cubic meter/operation, the contractor in presence of Engineer-in-charge should take cubes while casting of RCC/PCC work. The cubes in sets (3 nos. in each set) will be taken for testing (compressive strength of concrete). The testing is to be done in any Government Institute/ Lab. The costs of tests including transporting are to be borne by the contractor.

d. To ensure correct usage of cement Tamilnadu PWD standard specification for cement consumption of different items of work will be followed. Variation in use of cement from such theoretical requirement however shall be allowed to extent of plus or minus 5% (ie. ±5%) for all other items of work other than RCC work if the consumption of cement exceeds minus 5% (-5%), then penalty will be levied @ double the cost of less used total quantity.

e. For RCC work, if the consumption of cement used in the work is less than minus five percentage (-5%) of the theoretical requirement, the contractor has to ensure the quality of work at his risks & costs. IREL (India) Limited, Manavalakurichi reserves the right to take suitable action by stopping the payment of the item/items and subsequently ordered the agency to dismantle and re-cast as per specification and at his cost.

f. However, for excess usage no extra payment shall be made to the contractor.

g. All labour and supervision thereof, all materials, tools, implements and plant of every description, ladders, cordage, tackle, etc. as well as the provision of safe and substantial scaffolding required for the proper execution of the work in conformity with the specifications for the various items of work.

h. **Finally clearing away of all rubbish surplus materials, plant, etc, on completion of the work and dressing and leveling off and restoring the site to a tidy condition prior to handing over the work to the Engineer-in-Charge or his authorized assistant and also its maintenance until so taken over.**

i. Any materials brought to the site of work, or any work done by the Contractor but rejected by the Engineer-in-Charge as being not up to the specifications shall in the case of materials supplied be then and there removed from or broken up at the site of work, and in the case of work done be dismantled or rectified at the expense of the contractors as may be ordered by the Engineer-in-charge.

j. Upto ±10% variation in the execution of work contracts/purchase order of the total works contracts value for the sanctioned contract is allowed without issue of amendment/revision in the work order.
Beyond above variations amendment/revision with the approval of competent authority (as per delegation of powers) is necessary.

k. No workmen below 18 years will be permitted to work. For all hazardous works experienced personnel shall only be engaged.

l. The whole responsibility for supervision of the work and the workers employed by the contractor shall rest with the contractor. The contractor shall nominate one authorized Supervisor (site in-charge) at the work site all throughout the execution period. Such supervisor shall be authorized to act as Lead supervisor for the work and shall be authorized to act on behalf of the contractor, to accept notices under the contract and carryout the instructions of IREL (India) Limited from time to time.

m. IREL (India) Limited may ask to change/delete the person not found suitable for the work at any point of time. For any addition and deletion of the working person, prior permission from IREL (India) Limited shall be taken.

n. All labour and supervision thereof, all materials, equipments, tools, etc. as well as the provision of safe for the proper execution of the work in conformity with the specifications for the various items of work.

o. Contractor's all workmen and supervisor shall conduct himself in an orderly manner with the staff working in the Civil Section. Contractor and the personnel they have engaged for the execution of the contract shall abide by all the Safety & security rules and regulations of IREL (India) Limited. Contractor shall give the list of persons who shall be deployed at site like Site in-charge, supervisors, foreman, mason, fitters, welders, workers, etc. with their address and age proof well in advance. All such persons shall be subject to security check by security officials of IREL (India) Limited. The contractor shall obtain necessary Entry passes from concerned officials of IREL (India) Limited Security Wing prior to their deployment. Contractor shall ensure that no unauthorized persons are entering the work site except authorized workmen and supervisor.

p. Contractor shall adhere to all security procedures, checks and practices of IREL (India) Limited with regards all personnel engaged, all equipment, consumables, tools and tackles brought inside and taken out from the work site/s.

q. The contractor and his person shall maintain absolute integrity in carrying out the work and in case of any act detrimental to the interest of the company [IREL (India) Limited], the contract shall be terminated.

r. The company shall in no way be liable or responsible to the contractor for any liability claim, loss, damage or expenses of any kind of nature whatsoever arising from the contract. All labour engaged for the work will be under contractor's sole risk and responsibility.

6. <u>General instruction to the contractor</u>

Appointment of Competent Person:

- The contractor shall be engaged a Supervisor/Safety Officer for carryout the works.
- The contractor shall be engaged necessary manpower (Skilled/Semiskilled/Unskilled) for accomplishment of job.

i) The basic qualification cum routine works of Supervisors/Safety officers:

a. Diploma in Civil (5 years experience)/Engineer (Civil) (3 years experience).

b. Supervisors engaged by contractors shall ensure that, all the persons working under them are following and practicing the rules, regulation issued by the IREL and statutory authority from time to time.

c. To ensure to submission of work status report to EIC at Civil section daily.

d. Work to be carried out as per specification and as per the direction of EIC.

e. To ensure stay of supervisor at the work spot during the work execution period. EIC will not allow the persons to carry out the work without contract supervisors.

f. All the persons working under them are using the personal protective equipment supplied by the contractors and adhered to the normal safety rule of the company.

g. Before starting the work, they should understand the job, nature of risk involved and its mitigation measures. They should submit a risk assessment/Job hazard analysis report to the Engineer-in-charge prior to commencement of work.

h. Before starting the work, ask for the site clearance from EIC. Once site clearance is achieved, barricade the area to check the inadvertent entry to the work site.

i. Ensure the safety measures are taken in your presence and satisfy himself that all precautions have been taken to make the area, and safe to work.

j. To ask the contract people under your control to maintain good housekeeping at the work site.

k. Any unsafe condition or practices noticed is to be addressed forthwith and information must be even to EIC.

l. To arrange delivering pep/safety talks to workmen regularly prior to work.

m. To encourage your manpower to furnish constructive suggestion to improve safety standard at work place and discuss with EIC for implementation.

n. To ensure proper scaffolding while working at height and instruct workmen to use safety belts with anchorage. Fix the catch net where required.

o. To ensure the supply of proper tools and tackles for the work.

ii) Employee's / Workmen's Responsibility:

a. A contractor's employee must, while at work, take reasonable care for the health and safety of people who are at the employee's place of work and who may be affected by the employee's act or omissions at work.

b. An employee must, while at work, cooperate with his or her employer or other persons so far as is necessary to enable compliance with any requirement under the act or the regulations that is imposed in the interest of health, safety and welfare of the employee or any other person.

c. An employee shall strictly adhere to the provision of rules, regulation, bylaws issued by the IREL from time to time.

d. No person shall interfere with, impede or obstruct any person in the discharge of his duties, nor shall he offer or render any service, or use any threat to any other person with a view to preventing him from complying with the provision of the rules, regulation, bylaws and orders made there under. If any persons who receive such offer or threat shall inform their supervisors/safety officers or contractor forthwith for further course of action.

e. No person shall, except with the authority of their supervisor/safety officers or contractor, go in to any part of the plant/worksite other than that part of which he works.

f. Every person receiving any injury in the course of his duty shall report to their supervisors/safety officers or contractor, who in turn arrange necessary first aid to the injured persons.

g. Smoking and chewing tobacco, being in state of intoxication etc is strictly prohibited inside the plant area.

h. No person shall negligently or will fully do anything likely to endanger life or health or negligently or will fully omit to do anything necessary for the compliance of safety.

iii) General Obligation:

a. The Contractor shall maintain a record of register of work executed by them daily.

b. Contractor must supply DGMS approved safety equipment to their supervisor/safety officers & workmen.

c. EIC from IREL (India) Limited, shall have the right to stop the work of the contractor the work will lead to an unsafe and dangerous condition. EIC shall get the unsafe condition removed or provide protective equipment at the contractors cost, whichever is applicable.

d. The supervisor shall instruct the proper procedure, specify and enforce the use of necessary protective equipment such as safety belt, shoes, ladder, goggles, gloves etc, if ladders used for the work more than 3 meter height, same shall be tied and double lifeline safety belt shall be used.

e. Before any maintenance work is commenced, the supervisor and the workmen engages shall ensure the use of safety appliances.

7. WORKING HOURS: Work hours shall be between **8.00 AM to 4.00 PM** on all working days excluding Sundays and holidays. The contractor shall execute the work beyond the normal working hours (i.e. 8.00 am to 4.00 pm) and also during Sunday/holidays, by obtaining prior permission from the Engineer-in-charge in order to complete the work strictly as per the time schedule.

8. PERIOD OF CONTRACT:

a. The work shall be commenced within **15 (fifteen)** days from the date of issue of work order.

b. The **period of contract** shall be 4 **(four) months** from the date of commencement of work.

c. The period of maintenance (i.e. **performance guarantee period**) is **1 (one) year** from the date of completion of work.

d. The company reserves the right to terminate the contract without assigning any reason by giving two weeks notice and no claim for any loss or damage or compensation for such termination of contract shall be payable by the company or maintainable against the company.

9. PAYMENT TERMS:

a. Part payment will be made to the Contractor based on the following conditions:
Payment will be released on the basis of actual measurements of work done, such part payment will be limited to 95 % of the amount payable to the Contractor on certification of Engineer-in-charge.

b. After completion of the work in all respects the contractor will submit the final bill except a sum equal to **10% (performance guarantee money)** of total value of work done.

c. Defects if any, noticed during the maintenance period (performance guarantee period) shall be rectified by the contractor to the satisfaction of IREL (India) Limited within reasonable period of its notice & intimation.

d. If, in the opinion of IREL (India) Limited, the contractor has not responded to the maintenance demand/ defect rectification notice or fails to respond within reasonable period of the notice or unable to rectify the defect in a manner acceptable to IREL (India) Limited, the retention deposit shall stand forfeited without any notice. Further IREL (India) Limited shall be at liberty to get defects rectified through other agencies at the risk and cost of the contractor.

e. All payments are subject to deduction of tax at source as applicable.

10. PERFORMANCE GUARANTEE:

The contractor shall guarantee for quality of the material and workmanship for a period of one year from the date of completion of the work.

The Performance Guarantee money will be released to the contractor within four weeks at the expiry of the maintenance period **(i.e. 1 year)** on issue of No Objection Certificate by EIC, IREL (India) Limited, Manavalakurichi.

11. RISK PURCHASE CLAUSE:

After award of the contract, if the tenderer fails to execute the supply/work as per tender or at any time repudiates the order, IREL(India)Limited have the right to forfeit the EMD and invoke the security deposit and execute the order from other agencies at the risk and cost of the tenderer. The cost difference between the alternative arrangements and total contract value will be recovered from the tenderer along with other incidental charges. In case of execution of order through alternative sources and if price is lower, no benefit on this account will be passed on to the tenderer.

HAZARD IDENTIFICATION, RISK ASSESSMENT AND CONTROL

Sl No.	Work / Activity	Controls in place	Hazard	Control
1	Working at height	Work site	Working at: platform/ scaffolding; electrical over head line; temporary ladder; AC sheets/tile roof/slopped roof; falling of loose material from height.	1. Use of PPE's i.e. Shoe, helmet, safety net/rope grab/ roof top walk ladder, safe roof access system, safety belt, etc. 2. Ensuring use PPEs. 3. Ensuring anchoring of ladder. 4. Ensure the strength of platform / scaffolding before working and joints of lifting tackles. 5. Materials should be handled carefully. 6. Medically fit persons should be allowed. 7. Use of safe roof access system with double rope.
2	Excavation work.	Work site	Work at underground: electrical cables, loose sand sliding, and underground water sewage lines.	1. Work is carried out in presence of nominated electrician. 2. Ensuring use of PPEs.
3	RR masonry work.	Work site	Working at platform / scaffolding.	1. Use of PPE's i.e. Shoe, helmet, etc. 2. Ensure the strength of platform / scaffolding before working. 3. Materials should be handled carefully.
4	Dismantling of building/ structures.	Work site.	Working at building: fall of loose materials from height.	Ensuring use PPEs.

V. Bill of Quantity

Sl. No.	Description of work	Unit	Qty	Rate (per unit) Rs. P.
1	**Dismantling and removal of R.R.** masonry/brick masonry/ plain cement concrete work, etc. height upto 4.5m and dumping the debris within a lead of 500m by means of manually/mechanically, etc. complete as per specification and as directed by the Engineer-in-charge.	Cum	1.00	
2	**Dismantling and removal of RCC foundation**/ column/ slab/beam, etc. in all heights upto 4.5m including all necessary scaffolding and dumping the debris within a lead of 500m by means of manually / mechanically, etc., complete as per specification and as directed by the Engineer-in-charge.	Cum	1.00	
3	**Earthwork excavation** for foundation in all types of loose/hard soil and depositing the spoils with an initial lead of 20m and lift upto 2m including refilling etc. by means of manually/ mechanically complete as per specification and as directed by the Engineer-in-charge.	Cum	67.00	
4	**Supplying and filling of gravel** of approved quality above the earth surface with watering, levelling works, compaction and consolidating, including necessary anti-termite treatment, etc. by means of manually/ mechanically complete as per specification and as directed by the Engineer-in-charge.	Cum	111.00	
5	**Supplying, providing and laying soling stone 230mm thick** over the existing sub base/sub grade including levelling and consolidation to form a compact surface using hard blue granite soling stone with hand packing, wedging them tightly and filling the voids with loose sand, watering and sweeping the sand into the joints so that the hole is formed as solid mass, etc. complete as per standard specification and as per the direction of Engineer-in-charge.	Sqm	0.50	
6	**Supplying, providing and laying PCC 1:4:8 mix** for foundation/ flooring work using 40mm and below grade hard blue granite jelly including all form works, mixing, laying, compaction, consolidation and curing, etc. complete as per standard specifications and as directed by the Engineer-in-charge.	Cum	5.00	

7	**Supplying, providing and laying PCC 1:2:4 mix** for foundation/ flooring work /kerb wall drainage wall using 20mm and below grade hard blue granite jelly including all form works, mixing, laying consolidation and curing, etc. complete as per standard specifications and as directed by the Engineer-in-charge.	Cum	113.50	
8	**Supplying, providing & laying RR masonry** foundation/ wall/ retaining wall in cement mortar 1:6 for construction of wall using hard blue granite stone, etc. complete from 2.5 m below ground level to 4.5m height above ground level with neat finishing including proper pointing & necessary scaffolding work etc. complete as per standard specifications and as directed by the Engineer-in-charge.	Cum	14.00	
9	**Supplying, providing and laying brick masonry in CM 1:6** using well burnt country brick of minimum size 22.9x11.2x7cm for foundation /kerb wall/wall upto 4.5m height from ground level including all scaffolding, staging, curing, etc. complete complying with standard specifications and as directed by the Engineer-in-charge.	Cum	13.00	
10	**Supplying, providing and laying pre-cast concrete kerb stone** of minimum size 450x150x300mm laid along the edges of floor / kerbwall /pavements upto 4.5m height from ground level including necessary grouting of joint, all scaffolding, staging, curing, etc. complete complying with standard specifications and as directed by the Engineer-in-charge.	m	243.00	
11	**Supplying, providing and fixing twisted reinforcement IS 1786 HYSD bars** Fe500D/Fe550D (TMT bars - TATA/ Agni/ JSW) including fabrication, cutting, bending, cold tying, with overlapping to the standard length wherever necessary and placing the reinforcement in position as per the direction of Engineer-in-charge including binding, provision of spacer bars, cover blocks and all other incidental charges, necessary scaffolding, staging, safety arrangements, etc. complete for all RCC works (item No. 12) upto 4.5m height as per standard specification and as per the direction of Engineer-in-charge.	Kg.	90.00	
12	**Supplying, providing and laying cement concrete 1:1.5:3 for RCC works** height upto 4.5m using 20mm and below grade hard blue granite jelly with specified reinforcement (rate excluding the cost of reinforcement) and all mixing, laying, compaction, leveling, consolidation and curing, etc., including the cost of centering / shuttering work, necessary scaffolding, staging, safety arrangements, etc. complete as per the specification and as per the direction of Engineer-in-charge.	Cum	1.50	
13	**Supplying, plastering with CM 1:4 mix** 15mm thick one coat floated hard & trowelled smooth etc for floors & walls upto 4.5m height with neat finishing and necessary grouting, scaffolding, staging, safety arrangements, etc. and mix with water proofing compound (Sika /Perma), fibre mesh wherever required, etc. complete complying with standard specifications and as directed by the Engineer-in-charge.	Sqm	159.00	
14	**Supplying, plastering with CM 1:3 mix** 12mm thick one coat floated hard & trowelled smooth for RCC beam, column, ceiling, wall & floor upto 4.5m height with neat finishing and necessary grouting including all scaffolding, fibremesh wherever required, etc. complete complying with standard specifications and as directed by the Engineer-in-charge.	Sqm	171.00	
15	**Supplying, fabricating and fixing of required size ISI standard [YST 310 grade] heavy type GI round / square/ rectangular pipe** (Jindal /Kalinga) at all heights for roof truss, side cladding, shed, gate & partition, etc. including cutting, welding, grinding with necessary MS foundation bolt of size M16 Dia and 500 mm depth for placing with encasing/pocket hole with required template & 12mm thick base plate at bottom (foundation) and top 10mm thick base plate (joint area of GI pipe and roof truss) including proper binding/welding, grouting of foundation bolts with neat finishing etc. and painting the pipe with two coat with 1st quality epoxy smoke grey paint of approved shade (Asian / Berger/Nippon) over a coat of epoxy zinc-chromate/ zinc-phosphate primer (Asian/ Berger/ Nippon), including necessary scaffolding, safety arrangements, etc. complete as per specification and as per the	Kg.	17304.00	

	direction of Engineer-in-charge.			
16	**Supplying, providing and fixing of roof sheet with 0.47mm thick powder coated shee**t/ powder coated end curved / plain sheet [TATA - Durashine/JSW colouron+ (blue/red/grey)] at all heights with riveted joint/necessary fixing arrangements to suit the existing M.S. angle / channel, purlin, GI pipes, etc. including necessary ridges, UPVC rain water gutter around the shed, scaffolding, safety arrangements with all conveyance charges, loading/ unloading charges, etc. complete as per standard specification and as directed by Engineer-in-charge. (Minimum required overlapping is 15cm).	Sqm	200.00	
17	**Supplying, fabricating and fixing of required size ISI standard GI TATA Structura pipes** Square/ Rectangular/ Circular of thickness 2mm-10mm for roof, side cladding, shed, upto 15m height etc. including cutting, welding, grinding, bolt arrangements with neat finishing and necessary scaffolding, safety arrangements, etc. complete as per specification and as per the direction of Engineer-in-charge. (YST 310 grade- Square & Rectangular: IS: 4923 & Circular: IS: 1161/ IS3601).	Kg.	1.00	
18	**Supplying, providing and fixing of roof sheet with 2.8mm to 3.00mm thick UPVC** corrugated/ trafford/ trapezoidal roof sheet (Loyid /Tetto Colour/Sun-Arch/Sky Tech) Colour (blue / green / white / red/grey) at all heights with UPVC self-drilling screws with end cap are heavy-duty fasteners (2 nos. per m) to suit the existing M.S. angle /channel, purlin, GI pipes (for fixing bolt hole to be made with drilling machine only), including fixing the screw top covering with grease and end cap with necessary UPVC roof ridges including UPVC rain water gutter around the shed with necessary fitting, etc. and scaffolding, safety arrangements with all conveyance charges, loading/ unloading charges, etc. complete as per standard specification and as directed by Engineer-in-charge. (Minimum required overlapping is 15cm).	Sqm	1570.00	
19	**Supply of paints and painting two coat with emulsion paint** (Asian / Berger/Nippon) of approved shade for the surface of the buildings over a coat of wall primer (Asian, Berger, Nippon) upto 15m height from ground level, including thorough scrapping, cleaning, removal of dirt of existing surface, all tools & tackles, sandpaper and scaffolding arrangements, and applying crack filler/wall putty touch-up works wherever required etc. complete as per specification and as directed by the Engineer-in-charge.	Sqm	146.00	
20	**Supply of paints and painting two coat with 1st quality enamel / touch wood paint** of approved shade (Asian/ Berger/ Nippon) matching to the existing for all doors, windows, false ceiling, pipes etc. over a coat of wood sealer/primer and putty wherever required including thorough cleaning and removal of dirt and necessary scaffolding arrangements, upto 15m heights, etc. complete as per specification and as directed by the Engineer-in-charge.	Sqm	5.00	
21	**Supplying and fixing of 6kg PVC collecting pipe** (110mm dia) (Finolex /Ashirvad) at the end of rainwater collecting bowl with suitable powder coated clamps (2-5mm thick) and necessary fittings elbow, bend, coupling, solvent cement, scaffolding arrangements, etc. complete as per the direction of Engineer-in-charge.	m	220.00	
22	**Supplying, providing and laying with 9mm thick vitrified-Marbonite double charge**/matte finish tiles of size 1200mmx 600mm (Kajaria/ Somania /Qutone brand) with Cement Mortar 1:2 and pointing, (apply spacer joint, epoxy joint-wherever required) including finishing the joint and pointing flush with the surface, etc. complete as per specification and as directed by Engineer-in-charge.	Sqm	56.00	
23	**Supplying, providing and finishing the floor with 9mm thick Anti-skid ceramic tiles** (Somania/ Kajaria/ Qutone make) of size 300mm x 300mm of approved quality and shade in CM 1:3 thick and pointing the tiles with matching colour cement, etc. complete as per the direction of the Engineer-in-charge.	Sqm	6.00	
24	**Supplying, providing and fixing 50/60mm thick coloured (red / yellow/black/Grey)** square /Zig-zag/ Hexagon/ Rectangle shape concrete paver block of size 200x100mm/ 150x300mm/ 250x100mm/	Sqm	926.00	

	200x120mm/ 220x270mm/ 200x200mm pattern floor, bottom laying with 6mm jelly of 50mm thick over the earth surface including levelling the earth surface with neat finishing, side packing etc. complete as per the specification and as per the direction of the Engineer-in-charge.			
25	**Supplying, providing, laying and fixing of Stainless Steel hand rails** for staircase using square/circular of size 50mm 304L Grade Stainless Steel pipe (top & vertical pillar) of 1.4mm thick will be provided with tubular supports made of 304L Grade Stainless Steel pipe of 25mm dia of 1.4mm thick welded to the railing (3 rows c/c & vertical supports with necessary space) and the supports will be grouted into the surface area with 93.00mm thick Stainless Steel circular base plate of 304 Grade. The rate shall included for grouting into concrete with necessary supporting arrangements the hand rail in floor polishing buffing, bonding, cutting, grinding, conveyance, welding charges, etc. complete as per the standard specifications and as per the direction of Engineer-in-charge.	Feet	23.00	
26	**Supplying, providing, laying and fixing electrification concealed** (polythene pipe)/open point with required wire (make: Finolex/ Havells / Polycab), switch box (metal box-Legrand) switches (Make: Hi-fi) & 16Ams socket with all required necessary fittings including chipping, routing, clamping and all other incidental charges, etc. complete as per the specification and as per the direction of Engineer-in-charge.	Point	48.00	
27	**Supplying, providing and fixing of Led tube light 22W** (Havels/ Wipro Garnet) with all required necessary fittings etc. complete as per the specification and as per the direction of Engineer-in-charge.	No.	48.00	
28	**Engagement of Artist** for artistic work in the furniture/ gates/ name board/building wall, etc. including scrapping & cleaning the surface and marking, etc. complete as directed by the Engineer-in-charge.	No	16.00	
29	**Engagement of Fitter** for miscellaneous works complete as directed by the Engineer-in-charge.	No.	8.00	
30	**Engagement of Mason** for miscellaneous works complete as directed by the Engineer-in-charge.	No.	8.00	
31	**Engagement of labour (Mazdoor)** for miscellaneous work complete as directed by the Engineer-in-charge.	No.	10.00	

VI. Preparation and submission of online bid

The tender bids duly filled in all aspects and uploaded at CPP Portal (https://etenders.gov.in/eprocure/app) on or before the scheduled time and date as mentioned in the tender enquiry will be considered for evaluation.

The Bids shall be prepared in two parts viz. PQ cum Technical Bid (Part 1) and Price Bid (Part 2).

Technical bid (Part 1) and Price Bid (Part 2) shall be submitted be through CPP Portal. Bids submitted in CPP portal shall only be considered.

Technical Bid will be opened at the first instance and evaluated by IREL's concerned authority. In the second stage, financial bids of only the technically eligible offers will be opened for further evaluation and ranking before awarding the contract.

PQ cum Techno-commercial bid (Part 1)

It contains documents in support of eligibility criteria, self-attested tender document and any other document specifically specified in this tender document.

i.	The complete Qualifying Data as required in Prequalification Criteria (PQ)
ii.	Signed and sealed copy of Tender Acceptance letter (in format enclosed as Annexure II) as a token of acceptance of all tender terms and conditions.
iii.	Duly filled Tender documents, Annexures (I to VIII) & Undertaking
iv.	Any other technical details/documents etc. required to be submitted by the bidder as contained in the bid document

Part 2 shall contain Price Bid (to be submitted electronically).

This part shall contain only Schedule of prices duly filled in as per the Bid Proposal Schedules. No physical submission of hard copy is permitted.

Method of selection:

Part I of the bid will be evaluated and bidders meeting the PQ criteria and other tender conditions will be qualified as eligible bidders for opening of the price bids. The price bids opened subsequently will be

scrutinized for responsiveness and IREL shall consider placement of order on the qualified bidder, whose offer shall be overall lowest. However, IREL reserves the right to accept or reject all or any tender without assigning any reasons and does not bind itself to accept the lowest offer.

Note: To assist in the examination of documents submitted by the bidder in support of eligibility criteria (PQ), IREL may, at its discretion, ask the Bidder for clarification of its bid. The request for clarification and the response shall be in writing and no change in the price or substance of the bid shall be sought, offered or permitted.

VII. Special Terms and Conditions

1. Site Visit: Prior to quoting rates, the bidders are advised to visit the site at IREL (India) Limited, Manavalakurichi P.O., Kanyakumari District, Tamil Nadu – 629 252. Contact details of site officials are as under:

- Shri G.K Chandra Guptan, CM – Tech. (Purchase & Stores) email: purchase-mk@irel.co.in, Mob No. 9003681969, Landline No.04561 237255-256, 04651 200402 or
- Smt. S. Latha, Deputy Manager -Technical (Purchase) email: purchase-mk@irel.co.in, Mob. No.9442525813
- Shri. S.P. Ganeshan, CM – Technical (Civil & EME) email: spganeshan@irel.co.in , Mob No.9787778700 - for technical information

2. Effect and validity of bid:

(i) The submission of any bid connected with these documents and specifications shall constitute an agreement that the bidder shall have no cause of action or claim against IREL for rejection of his bid.

(ii) The bid shall be valid for a period of 120 days from bid due date.

3. Right to reject the Tender:

(a) IREL reserves the right to reject any tenders whatsoever without assigning any reason thereof.

(b) IREL reserves the right to modify/ add/ reduce the scope, either in whole or in part any of the clauses mentioned herein without assigning any reason thereof.

Further IREL, in its sole discretion and without incurring any obligation or liability, reserves the right, at any time, to;

a. suspend and/ or cancel the Bidding Process and/ or amend and/ or supplement the Bidding Process or modify the dates or other terms and conditions relating thereto;

b. consult with any Bidder in order to receive clarification or further information;

c. pre-qualify or not to pre-qualify any Bidder and/ or to consult with any Bidder in order to receive clarification or further information;

d. retain any information and/ or evidence submitted to IREL by, on behalf of, and/ or in relation to any Bidder; and/ or

e. independently verify, disqualify, reject and/ or accept any and all submissions or other information and/ or evidence submitted by or on behalf of any Bidder

It shall be deemed that by submitting the Bid, the Bidder agrees and releases IREL, its employees, agents and advisers, irrevocably, unconditionally, fully and finally from any and all liability for claims, losses, damages, costs, expenses or liabilities in any way related to or arising from the exercise of any rights and/ or performance of any obligations hereunder and the Bidding Documents, pursuant hereto, and/ or in connection with the Bidding Process, to the fullest extent permitted by applicable law, and waives any and all rights and/ or claims it may have in this respect, whether actual or contingent, whether present or in future.

4. **Prices:** Tenders offering firm prices are only acceptable to us. Firm Price shall be quoted as per the price schedule for delivery at designated works.GST as applicable is to be considered as per the Price Schedule of the tender document.

5. **TENDER RATES:** a) The rates quoted in the price schedule shall be in Indian rupees only. The quoted rates shall be firm throughout the period of Contract including extension of time, if any. b) If the bidder submits abnormally low bid in combination with other elements of the bid which raises material concern as to the capability of the bidder to perform the contract at the offered price, the bidder shall be asked to provide detailed price analysis of the bid in relation to the scope, schedule allocation of risk and responsibilities and any other requirements of the bid documents. If the bidder fails to demonstrate its capability to deliver the contract at the offered price the price bid shall be considered un-responsive.

6. Vendor should be responsible for clearing the waste materials generated during installation work.

7. Data Sheet of the products(s) offered in the bid, are to be uploaded along with the bid documents. Buyers can match and verify the Data Sheet with the product specifications offered. In case of any unexplained mismatch of technical parameters, the bid is liable for rejection.

8. The Bidder must quote all the products as per the Tender. Partial Bids will be rejected.

9. Organization is the final authority to judge the tender called items and has every power - to accept or reject the same without assigning any reasons

10. WARRANTY

The materials/equipment(s) and all accessories supplied shall be warranted against any defective material, malfunctioning or poor workmanship for a minimum period of 36 months from the date of installation.

11. Purchase Preference for Micro & Small Enterprises (MSE's)

Benefits, as prescribed by the MSME Policy of the Government of India shall be provided to MSE vendors registered as manufacturers for the goods procured or for the service providers. The procuring Entity reserves its option to give price preference to Micro and Small Industries in comparison to the large-scale industries as per policies of the Government from time to time.

12. Make In India

For this procurement, Public Procurement (Preference to Make in India) Order 2017 dated 15.06.2017, 28.05.2018 & 29.05.2019 and subsequent Orders issued by the respective Nodal Ministry shall be applicable. The bidder to provide certificate for minimum 50% and 20% local content required for qualifying Class 1 and Class 2 Local Supplier respectively.

The Public Procurement (Preference to Make in India) PPP_MII order 2017 wrt prescribed local content is applicable for procurement of all good, service and works.

The bidder to provide needful certificate attached at Annexure-VII.

13. Restriction on procurement from a bidder of a country which shares a land border with India(As per GoI guidelines amended from time to time)

The bidder to provide needful certificate attached at Annexure-VIII.

14. IREL reserves the right to increase or decrease the quantity to be ordered up to 25 percent of bid quantity at the time of placement of contract. IREL also reserves the right to increase the ordered quantity by up to 25% of the contracted quantity during the currency of the contract at contracted rates. Bidders are bound to accept the orders accordingly.

VIII. General Conditions of the Contract

This document shall accompany and be a part of the tender. General conditions of procurement shall include the following clauses:

Sl. No.	PARTICULARS	Page No.
1.0	DEFINITIONS	24
1.2	SINGULAR & PLURAL	24
1.3	CLAUSE HEADINGS OR MARGINAL NOTES	24
1.4	SPECIFICATION	24
1.5	ENGINEERING-IN-CHARGE	25
2.0	ASSIGNMENT AND SUBLETTING	25
3.0	EXTENT OF CONTRACT	25
4.0	CONTRACT DOCUMENTS	25
4.1	CUSTODY OF DRAWINGS	25
4.2	ONE COPY OF DRAWINGS TO BE KEPT ON SITE:	26
4.3	FURTHER DRAWINGS AND INSTRUCTIONS	26
5.0	CONTRACT AGREEMENT	26
6.0	MODIFICATION IN CONTRACT	26
7.0	USE OF CONTRACT DOCUMENTS AND INFORMATION	26
7.4	CONTRACT TO INFORM HIMSELF FULLY-	26-27
7.5	GENERAL INFORMATION	27-28
7.6	STANDARDS	28
7.7	PRIORITY OF CONTRACT DOCUMENTS	28
7.8	SPECIAL CONDITIONS OF CONTRACT:	28
8.0	PATENT INFRINGEMENT	28-29
9.0	INDEMNITIES	29
9.1.1	CONTRACTOR INDEMNITIES FOR LIABILITIES	29
9.1.2	CONTRACTOR INDEMNIFICATION FOR TAXES	29
9.1.3	INDEMNIFICATION BY SUB-CONTRACTOR/ VENDOR	29

9.1.4	PAYMENT OF AMOUNTS UNDER THIS CLAUSE	29
9.1.5	PERMITS AND CERTIFICATES	30
9.1.6	MECHANICS LIEN	30
10.0	WORK TO BE TO THE SATISFACTION OF ENGINEER:	30
11.0	PROGRAMME TO BE FURNISHED :	30
12.0	CONTRACTORS SUPERINTENDENCE:	30
13.0	CONTRACTOR'S EMPLOYEE:	30
14.0	EXTRA SUPERVISION ON WORK:	30
15.0	SETTING-OUT OF THE WORKS	31
16.0	USE OF EXPLOSIVES	31
17.0	CARE OF WORKS	31
17.1	EXCEPTED RISKS	31
18.0	USE OF LAND & BUILDINGS	31-32
19.0	DAMAGES TO PERSONS AND PROPERTY	32
20.0	ACCIDENT OR INJURY TO WORKMEN	32
21.0	STATUTORY COMPLIANCE CONDITIONS	32-33
22.0	GIVING OF NOTICE AND PAYMENT OF FEES	33
22.1	COMPLIANCE WITH STATUTES REGULATIONS ETC.	33
23.0	FOSSILS ETC.:	33
24.0	PATENT RIGHTS & ROYALTIES	33
25.0	INTERFERENCE WITH TRAFFIC ADJOINING PROPERTIES	34
26 (a)	EXTRAORDINARY TRAFFIC:	34
26(b)	WATERBORNE TRAFFIC:	34
27.0	OPPORTUNITIES FOR OTHER CONTRACTORS:	34
28.0	SUPPLY OF PLANT, MATERIAL AND LABOUR:	34
29.0	DELAY IN OBTAINING MATERIALS BY THEEMPLOYER	34
30.0	SITE CLEARANCE ON COMPLETION OF WORK	34
31.0	RETURN OF SURPLUS MATERIALS	34-35
	WORK MATERIAL AND PLANT	
32.0	QUALITY OF MATERIAL & WORKMANSHIP AND TESTS:	35
33.0	ACCESS TO SITE	35
34.0	INSPECTION, TESTING AND EXPEDITING:	35
35.1	EXAMINATION OF WORK BEFORE COVERING UP	35
35.2	UNCOVERING & MAKING OPENINGS	35-36
36.0	REMOVAL OF IMPROPER WORK & MATERIALS	36
37.0	DEFAULT OF CONTRACTOR IN COMPLIANCE	36
38.0	SUSPENSION OF WORK:	36
39.0	SUSPENSION LASTING MORE THAN 90 DAYS	36
40.0	ISSUE OF OTHER MATERIALS FROM IREL STORES	36-37
	COMMENCEMENT TIME AND DELAYS	
41.0	COMMENCEMENT OF WORK	37
42.0	WAY LEAVES ETC.	37
43.0	TIME FOR COMPLETION	37
44.0	EXTENSION OF TIME FOR COMPLETION	37
44.1	TIME EXTENSION OF CONTRACT	37
45.0	NO NIGHT OR SUNDAY WORK:	37
46.0	RATE OF PROGRESS	37-38
47.0	LIQUIDATED DAMAGES FOR DELAYED EXECUTION OFCONTRACT	38
48.0	FORCE MAJEURE	38
49.0	CERTIFICATE OF COMPLETION OF WORK	38-39
50.0	MAINTENANCE AND DEFECTS	39

50.1	DEFINITION OF PERIOD OF MAINTENANCE	39
50.2	EXECUTION OF WORKS OF REPAIR ETC.	39
50.3	COST OF EXECUTION OF WORKS OF REPAIR ETC.	39
50.4	REMEDY ON CONTRACTOR'S FAILURE TO CARRYOUT	39
51.0	CONTRACTOR TO SEARCH	39
52.0	ALTERATIONS, ADDITIONS AND OMISSIONS	39
52.1	VARIATIONS	39
53.1	VALUATION OF VARIATIONS	40
53.2	POWER OF ENGINEER TO FIX RATES	40
53.3	CLAIMS	40
53.4	EXTRA ITEM	40
54.0	PROPERTY IN MATERIALS:	40
54.1	MATERIALS OBTAINED FROM DISMANTLEMENT &EXCAVATION ETC	40
54.2	RELICS, GOLD, SILVER FOUND IN OR UPON THE SITE:	41
55.0	NO APPROVAL BY VESTING:	41
	MEASUREMENT	
56.0	QUANTITIES	41
57.0	WORKS TO BE MEASURED	41
58.0	MODE OF MEASUREMENT	41
59.0	PAYMENT FOR WORK DONE	41-42
59.2	BILL TO BE SUBMITTED MONTHLY	42
59.3	BILLS TO BE ON PRINTED FORMS	42
59.4	RETENTION MONEY	42
59.5	SET-OFF	42
59.6	DEDUCTIONS FROM CONTRACT PRICE	42
59.7	TAXES APPLICABLE TO CONTRACTOR'S MANPOWER, TURNOVER, EQUIPMENT ETC.	43
60.0	APPROVAL BY MAINTENANCE CERTIFICATE	43
61.0	MAINTENANCE CERTIFICATE	43
61.1	CESSATION OF EMPLOYER'S LIABILITY	43
61.2	UNFULFILLED OBLIGATION:	43
62.0	URGENT REPAIRS	43
63.0	RESOLUTION OF DISPUTES/ ARBITRATION	44
63.4	ARBITRATION:	44
63.5	JURISDICTION	44
64.0	ACTS OF PARLIAMENT, LOCAL AND OTHER AUTHORITIES AND BYE-LAWS:	44
64.1	COMPLYING WITH REGULATIONS	44-45
65.0	BREACH OF TERMS, SUSPENSION AND TERMINATION	45
65.1	BREACH OF TERMS	45
65.2	SUSPENSION	45
65.3	TEMPORARY SUSPENSION	45
65.4	EVENT OF DEFAULT	45-46
65.5	RECOURSE TO EVENT OF DEFAULT	46
65.6	TERMINATION DUE TO CONTRACTOR EVENT OF DEFAULT	46
65.7	PAYMENT UPON TERMINATION	46
65.8	DISPUTES ABOUT EVENTS OF TERMINATION`	46
66.0	LIMITATION OF LIABILITY	47
67.0	METHOD OF BLACKLISTING VENDORS	47
68.0	SECRECY	47
69.0	LABOUR	47-48
70.0	RETURNS OF LABOUR	48

71.0	LABOUR LICENCE:	48
72.0	WOMAN LABOUR	48
73.0	EMPLOYMENT OF CHILDREN	48
74.0	ENTRY PASS	48
75.0	SAFE CUSTODY OF ENTRY PASS	49
76.0	LIABILITY FOR ACCIDENTS AND DAMAGES	49
77.0	SAFETY CLAUSES	49
78.0	INSURANCE	50-52
79.0	GENERAL	52
80.0	EARNEST MONEY DEPOSIT (EMD)	52-53
81.0	SECURITY DEPOSIT (PERFORMANCESECURITY) OR PERFORMANCE BANK GUARANTEE	53
82.0	RETENTION MONEY	54
83.0	REFUND OF SD AND RETENTION MONEY	54
84.0	FORFEITURE OF SD & RETENTION MONEY	54
85.0	SAFETY REGULATIONS	54
86.0	ETHICS IN TENDERING & OTHER BUSINESS DEALINGS	55
87.0	UNDERTAKING	56
88.0	DECLARATION BY CONTRACTOR /SERVICE PROVIDER	57

General Conditions of Contract

1.0 Definitions:

In the contract (as hereinafter defined), the following “words‟ and “Definitions‟ expressionshall have the meaning hereby assigned to them except where the context otherwise requires:

a) **"Employer"** means IREL (India) Limited (IREL) having its registered office at Plot No. 1207, Veer Savarkar Marg, Near Siddhi Vinayak Temple, Prabhadevi, Mumbai- 400028. The term Employer includes successors, assigns of IREL.

b) **"Contractor"** means the person or persons, firm or company whose tender has been accepted by the Employer and includes the Contractors‟ personal representatives, successors and permitted assignees.

c) **"Engineer"** means the representative of IREL or the other Engineer appointed from time to time by the Employer and notified in writing to the contractor to act as Engineer for the purposes of the contract in place of the said representative.

d) **"Engineer's Representative"** means any resident engineer or assistant of the Engineer or any other employee or agent appointed from time to time by the Employer or the Engineerto perform the duties set forth in Clause 1.5 hereof and whose authority shall be notified in writing to the Contractor by the Engineer.

e) **"Work"** shall mean and include all works specified or set forth and required in and by the specifications, drawing and schedule hereto annexed or to be implied there from or incidental thereto or to be hereafter specified or required in such explanatory instructions and drawings (being in conformity with the original specification, drawing and schedule) and also such additional instructions and drawings not in conformity as aforesaid as shallfrom time to time, during the progress of the work hereby contracted for, be supplied by the Employer.

f) **"Contract"** means the Invitation to tender, Instructions to Tenderers, General Conditions of Contract, Special. Conditions of Contract, Specifications, Drawings. Tender Schedule showing approximate quantities, quoted rates and amount against each item, Time Schedule, Letter of Intent/Award, Tender and Contract agreement.

g) **"Contract Price"** means In the case of Lump sum Contracts, the price payable to the Contractor as mentioned in the Contract for each line item. Price is fixed & firm during the entire duration of contract subject to price reduction clause in case of delay in performance; however, price is subject to price variation clause as per special conditions of contract, if any In the case of Item Rate Contracts, Rates by the item rates quoted by the tenderer and accepted by the Company for the various items.

h) **"Constructional Plant"** means all appliances or things of whatsoever nature as required or about the execution, completion or maintenance of the Works or, Temporary Works (as hereafter defined) but does not include materials or other things intended to form or forming part of the permanent work or temporary housing, hutting, offices & Stores etc.

i) **"Temporary Works"** means all temporary works of every kind required in or about the execution, completion or maintenance of the works.

j) **"Drawings"** means the drawings referred to in the Specification and any modification of such drawings approved in writing by the Engineer and such other drawings as may from time to time be furnished or approved in writing by the Engineer.

k) **"Site”** means the lands and other places envisaged by the Employer where the Works are to be executed or carried out.

l) **"Letter of Intent"** is intimation by a letter to tenderer that tender has been accepted in accordance with the provisions contained in that letter.

m) **"Approved"** means approved in writing including subsequent written confirmation of previous verbal approval and "approval" means approval in writing including aforesaid.

1.2 Singular & Plural: Words importing the singular only also include the plural and vice versa where the context requires.

1.3 Clause Headings or Marginal notes: The Clause headings or marginal notes in these General Conditions shall not be deemed to be part thereof or be taken into consideration in the interpretation or construction thereof or of the contract.

1.4 Specification: The term "Specification" shall mean schedules, detailed designs, and statements of technical data, performance characteristics and all such particulars mentioned as such in the contract. In the absence of any specific specifications issued by the Employer, the specifications issued by the BIS will apply.

1.5 ENGINEER-IN-CHARGE:

The Engineer-In-Charge shall represent and act on behalf of IREL at all times during the currency of the all notices, instructions, orders, certificates, approvals and all other communications under this Contract shall be given by the Engineer-In-Charge, except as herein otherwise provided.

The Engineer-In-Charge shall have authority for

- General supervision, follow up of supply and direction of the Works
- Direction to stop the Works whenever such stoppage may be necessary to ensure the proper execution of the works
- To reject all Works and Materials which do not conform to the contract specifications. The Engineer-In-Charge shall have no authority to relieve the CONTRACTOR of any of his duties or obligations under the contract or except as expressly provided here-in-under or elsewhere in the Contract to order any work involving delay or any extra payment by IREL or to make any variation of or in the Works.

2.0 ASSIGNMENT AND SUB-LETTING:

2.1 The Contractor shall not assign the Contract or any part thereof or any benefit or interest therein or there under (other than a charge in favour of the Contractor's Bankers of any money due or to become due under this Contract) without the prior written consent of Employer.

2.2 The Contractor shall not sub-let the whole or part of the Works except where otherwise provided by the Contract, and even then only with the prior written consent of the Employer and such Consent if given shall not relieve the Contractor from any liability or obligation under the contract and he shall be responsible for the acts, defaults and neglects of any Sub-contractor, his agents, servants or workmen as fully as if they were the acts, defaults or neglects of the Contractor, his agents, servants or workmen Provided always that the provision of labour on a piecework basis shall not be deemed to be a sub-letting under this clause.

2.3 CONTRACTOR shall supervise and direct the work of all SUB-CONTRACTORS and shallbe responsible for co-coordinating their work. If CONTRACTOR fails to correct, or commence to correct and execute the correction with due diligence of deficient or defectivework performed by any SUB-CONTRACTOR within reasonable time (provided it doesn't materially impact safe operation of plant), after receipt by CONTRACTOR of a notice from EMPLOYER with respect thereto. EMPLOYER may (but shall not be obligated to), after seven days following receipt by CONTRACTOR of an additional notice, and without prejudice to any other right or remedy take all reasonable steps to remedy such defective or deficient work at risk and cost of CONTRACTOR.

2.4 CONTRACTOR shall require all SUB-CONTRACTORS to perform in accordance with the relevant requirements of the CONTRACT including FINAL PROPOSAL, all APPLICABLE LAWS and APPLICABLE PERMITS, Prudent Utility Practice, Good Engineering Practices, the requirements of the NIT, and all Warranties of SUB-CONTRACTORS/SUBVENDORS and Manufacturers and all insurance policies relating to the PLANT or the WORK.

2.5 CONTRACTOR shall be solely responsible for paying each SUB-CONTRACTOR and anyother person to whom any amount is due from CONTRACTOR for services, equipment, construction equipment, materials or supplies otherwise related to the PLANT or the WORK.

2.6 CONTRACTOR shall take all reasonable steps and actions to ensure that such service, equipment, construction equipment, materials and supplies and the like have been or willbe received, inspected and approved and that such services have been or will be properlyperformed.

2.7 EMPLOYER shall not be deemed by virtue of the CONTRACT to have any contractual obligation to or relationship with any SUB-CONTRACTOR.

3.0 EXTENT OF CONTRACT:

The Contract comprises the construction, completion and maintenance of the works and except in so far as the contract otherwise provides, the provision of all labour, materials, constructional plant, temporary works and everything whether of a temporary or permanent nature required in and for such construction, completion and maintenance.

4.0 CONTRACT DOCUMENTS:

4.1 CUSTODY OF DRAWINGS:

The drawings shall remain in the sole custody of the Engineer but two copies thereof shallbe furnished to the Contractor free of cost. The Contractor shall provide and make at his own expense any further copies required by him. On the completion of the contract, the Contractor shall return to the Engineer all drawings provided under the contract, The Contractor shall give adequate notice in writing to the Engineer or Engineer's representative, of any further drawings or specifications that may be required for the execution of the works or otherwise under the contract.

4.2 ONE COPY OF DRAWINGS TO BE KEPT ON SITE:

One copy of the drawings furnished to the Contractor as aforesaid shall be kept by the Contractor on the site and the same shall at all reasonable time be available for inspection and use by the Engineer and the Engineer's representative and by any otherperson authorized by the Engineer in writing.

4.3 FURTHER DRAWINGS AND INSTRUCTION:

The Engineer shall have full power and authority to supply to the Contractor from time to time during the progress of the works such further drawings and instructions as shall be necessary for the purpose of the proper and adequate execution and maintenance of theworks and the Contractor shall carry out and be bound by the same.

5.0 CONTRACT AGREEMENT:

The Contractor shall enter into and execute a Contract Agreement in the form annexed hereto within the specified time in Letter of Intent/ Award and in default there of the earnestmoney paid by the Contractor shall be forfeited and acceptance of his Tender shall be considered as withdrawn. The cost of the stamp fee of the agreement is to be borne and paid by the Contractor.

6.0 MODIFICATIONS IN CONTRACT:

All modifications leading to changes in the CONTRACT with respect to technical or commercial aspects including terms of completion period shall be considered valid only when amendment to the CONTRACT is issued by the Employer.

The modification or amendment of the CONTRACT for an adjustment in the CONTRACTPRICE and/ or COMPLETION DATE in accordance with the applicable provision of the CONTRACT, if any, shall be subject to mutual agreement.

IREL shall not be bound by any printed conditions or provisions in the CONTRACTOR's bid forms or acknowledgement of CONTRACT and other documents which support to impose any condition at variance with or supplemental to CONTRACT.

7.0 USE OF CONTRACT DOCUMENTS AND INFORMATION:

7.1 The CONTRACTOR shall not, without the IREL's prior written consent, disclose the CONTRACT or any provision thereof, or any specification, plan, drawing, pattern, sampleor information furnished by or on behalf of the IREL in connection therewith, to any person other than a person employed by the CONTRACTOR in the performance of the CONTRACT. Disclosure to any such employed person shall be made in confidence and shall extend only so far as may be necessary for purpose of such performance.

7.2 The CONTRACTOR shall not without the IREL's prior written consent, make use of any document or information enumerated in Clause 7.1 except for purpose of performing the CONTRACT.

7.3 Any document other than CONTRACT, itself, enumerated in Clause 7.1 shall remain the property of the IREL and shall be returned (all copies) to the IREL on completion of the CONTRACTOR's performance under the CONTRACT, if so required by the IREL.

7.4 CONTRACTOR TO INFORM HIMSELF FULLY:

The CONTRACTOR in fixing his rate shall for all purpose whatsoever reason may be, deemed to have himself independently obtained all necessary information for the purposeof preparing his tender and his tender as accepted shall be deemed to have taken into account all contingencies as may arise due to such information or lack of same. The correctness of the details, given in the Tender Document to help the CONTRACTOR to make up the tender is not guaranteed.

The CONTRACTOR shall be deemed to have examined the CONTRACT DOCUMENTS, to have generally obtained his own information in all matters whatsoever that might affectthe carrying out of the works at the schedules rates and to have satisfied himself to the sufficiency of his tender. Any error in description of quantity or omission there from shall not vitiate the CONTRACT or release the CONTRACTOR from executing the work comprised in the CONTRACT according to DRAWINGS and SPECIFICATIONS at the scheduled rates. He is deemed to have known the scope, nature and magnitude of the WORKS and the requirements of materials and labour involved etc., and as to what all works he has to complete in accordance with the CONTRACT documents whatever be the defects, omissions or errors that may be found in the DOCUMENTS. The CONTRACTOR shall be deemed to have visited surroundings, to have satisfied himself to the nature of all existing structures, if any, and also as to the nature and the conditions of the Railways, Roads, Bridges and Culverts, means of transport and communication, whether by land, water or air, and as to possible interruptions thereto and the access andegress from the site, to have made enquiries, examined and satisfied himself as to the sites for obtaining sand, stones, bricks and other materials, the sites for disposal of surplusmaterials, the available accommodation as to whatever required, depots and such other buildings as may be necessary for executing and completing the works, to have made local independent enquiries as to the sub-soil, subsoil water and variations thereof, storms, prevailing winds, climatic conditions and all other similar matters affecting these works. He is deemed to have acquainted himself as to his liability of

payment of Government Taxes, Customs duty and other charges, levies etc.

Any neglect or omission or failure on the part of the CONTRACTOR in obtaining necessary and reliable information upon the foregoing or any other matters affecting the CONTRACT shall not relieve him from any risks or liabilities or the entire responsibility from completion of the works at the scheduled rates and times in strict accordance with the CONTRACT.

It is, therefore, expected that should the CONTRACTOR have any doubt as to the meaning of any portion of the CONTRACT DOCUMENT, he shall set forth the particulars thereof in writing to IREL in duplicate, before submission of tender. IREL may provide such clarification as may be necessary in writing to CONTRACTOR, such clarifications as provided by IREL shall form part of CONTRACT DOCUMENTS.

No verbal agreement or inference from conversation with any effect or employee of the IREL before, during or after the execution of the CONTRACT AGREEMENT shall in any way affect or modify and of the terms or obligations herein contained. Any change in layout due to site conditions or technological requirement shall be binding on the CONTRACTOR and no extra claim on this account shall be entertained.

7.5 GENERAL INFORMATION:

a) **Location of Site:** The proposed location of Project site is defined in the Special Conditions of Contract.

b) **Access by Road:** CONTRACTOR, if necessary, shall build other temporary access roads to the actual site of construction for his own work at his own cost. The CONTRACTOR shall be required to permit the use of the roads so constructed by him for vehicles of any other parties who may be engaged on the project site. The CONTRACTOR shall also facilitate the construction of the permanent roads should the construction there of start while he is engaged on this work. He shall make allowance in his tender for any inconvenience he anticipates on such account. Non-availability of access roads, railway siding and railway wagons for the use of the CONTRACTOR shall in no case condone any delay in the execution of WORK nor be the cause for any claim for compensation against the EMPLOYER.

c) **Scope of Work:** The scope of WORK is defined in the Technical Part of the tender document. The CONTRACTOR shall provide all necessary materials, equipment, labour etc. for the execution and maintenance of the WORK till completion unless otherwise mentioned in the Tender Document.

d) **Water Supply:** Contractor will have to make his own arrangements for supply of water to his labour camps and for works. All pumping installations, pipe network and distribution system will have to be carried out by the Contractor at his own risk and cost. Alternatively, IREL at his discretion may endeavour to provide water to the Contractor at its source of supply provided the Contractor makes arrangement for pipe networks from source of supply and such distribution pipe network shall have prior approval of the Engineer-in- Charge so as not to interfere with the layout and progress of the other construction works. In such case, the rate for water shall be deducted from the running account bills (Subject to rate of deduction specifically mentioned in the tender, if any). However, IREL does not guarantee the supply of water and this does not relieve the Contractor of his responsibility in making his own arrangement and for the timely completion of the various works as stipulated.

e) **Power Supply:** Subject to availability, IREL will supply power at 400/440 V at only one point at the nearest sub-station, from where the CONTRACTOR will make his own arrangement for temporary distribution. The point of supply will not be more than 500 m away from the CONTRACTOR'S premises. All the works will be done as per the applicable regulations and passed by the ENGINEER-IN-CHARGE. The temporary line will be removed forthwith after the completion of work or if there is any hindrance caused to the other works due to the alignment of these lines, the CONTRACTOR will re-route or remove the temporary lines at his own cost. The CONTRACTOR at his cost will also provide suitable electric meters, fuses, switches, etc. for purposes of payment to IREL which should be in the custody and control of the IREL. The cost of power supply shall be payable to IREL every month for Construction Works which would be deducted from the running account bills (subject to rate of deduction specifically mentioned in the tender, if any). IREL shall not, however, guarantee the supply of electricity nor have any liability in respect thereof. No claim for compensation for any failure or short supply of electricity will be admissible.

It shall be the responsibility of the CONTRACTOR to provide and maintain the complete installation on the load side of the supply with due regard to safety requirement at site. All cabling, equipment, installations etc. shall comply in all respects with the latest statutory requirements and safety provisions, i.e., as per the Central/State Electricity Acts and Rules etc. The CONTRACTOR will ensure that his equipment and Electrical Wiring etc., are installed, modified, maintained by a licensed Electrician/Supervisor. A test certificate is to be produced to the ENGINEER-IN-CHARGE for his approval, before power is made available.

At all times, IEA regulations shall be followed failing which the IREL has a right to disconnect the power

supply without any reference to the CONTRACTOR. No claim shall be entertained for such disconnection by the ENGINEER-IN-CHARGE. Power supply will be reconnected only after production of fresh certificate from authorized electrical supervisors.

The IREL is not liable for any loss or damage to the CONTRACTOR's equipment as a result of variation in voltage or frequency or interruption in power supply or other loss to the CONTRACTOR arising there from.
The total requirement of power shall be indicated by the tenderer along with his tender.

7.6 STANDARDS:
The goods and services supplied under this CONTRACT shall conform to the standards mentioned in the technical specifications and when no applicable standard is mentioned, CONTRACTOR shall follow best engineering practices.

7.7 PRIORITY OF CONTRACT DOCUMENTS:
Except if and the extent otherwise provided by the Contract, the provisions of the General Conditions of Contract and Special Conditions shall prevail over those of any other documents forming part of the CONTRACT. Several documents forming the CONTRACT are to be taken as mutually explanatory of one another, but in case of ambiguities or discrepancies the same shall be explained and adjusted by the ENGINEER-IN-CHARGE who shall thereupon issue to the Contractor instructions thereon and in such event, unless otherwise provided in the Contract, the priority of the documents forming the Contract shall be as follows:

1. The Contract Agreement;
2. The Letter of Acceptance;
3. The Instructions to Bidders(ITB);
4. Special Conditions of Contract (SCC);
5. General Conditions of Contract (GCC)
6. Any other document forming part of the Contract.

Works shown in the DRAWING but not mentioned in the SPECIFICATIONS or described in the SPECIFICATIONS without being shown in the DRAWINGS shall nevertheless be deemed to be included in the same manner as if they had been specifically shown upon the DRAWINGS and described in the SPECIFICATIONS.

7.8 SPECIAL CONDITIONS OF CONTRACT:
Special Conditions of Contract shall be read in conjunction with the General Conditions of Contract, specification of Work, Drawings and any other documents forming part of this CONTRACT wherever the context so requires. Notwithstanding the sub-division of the documents into these separate sections and volumes, every part of each shall be deemed to be supplementary to and complementary of every other part and shall be read with and into the CONTRACT so far as it may be practicable to do so.

Where any portion of the General Conditions of Contract is repugnant to or at variance with any provisions of the Special Conditions of Contract, unless a different intention appears, the provisions of the Special Conditions of Contract shall be deemed to over-ride the provisions of the General Conditions of Contract and shall to the extent of such repugnancy, or variations, prevail.

8.0 PATENT INFRINGEMENT:

8.1 CONTRACTOR shall at all times, indemnify and keep indemnified IREL against all claims or suits and defend, at its own cost, any suit or action brought against IREL and hold IREL free and harmless against all costs of such claims or suits which may be made against IREL in respect of any infringement of any rights protected by patent, copyright, trademarks, and trade secrets to the extent that such claim, suit, or action is a result of the use of CONTRACTOR"s technical Information for the construction, maintenance, and operation of PLANT and the use of CONTRACTOR"s and/or any other process, licenser's processes used in PLANT. IREL shall pass on all claims made against it to CONTRACTOR for settlement.

8.2 CONTRACTOR declares that to the best of his knowledge and belief the use of CONTRACTOR"s Technical Information for the construction, maintenance, and operation of PLANT and the use of CONTRACTOR"s processes used in PLANT will not infringe any valid patent rights of a third party. However, if at any time such infringement arises, CONTRACTOR agrees to keep IREL indemnified and harmless against such claims and costs thereof and make arrangements that will allow IREL to continue the operation of PLANT.

8.3 IREL shall promptly advise CONTRACTOR in writing of any claim of infringement or any action for infringement of patents brought against it by a third party and based upon the use of CONTRACTOR"s Technical Information. If such use is in accordance with instructions given in writing by CONTRACTOR, CONTRACTOR shall undertake the defence, or assist IREL in the defence, of the claim or suit up to final judgment or settlement.

8.4 CONTRACTOR shall undertake the defence on behalf of IREL and shall have sole chargeand direction of the defence, and shall bear all costs related thereto. CONTRACTOR shallfurther hold IREL harmless from any damages or other sums that may become payable by IREL under a final judgment or settlement. However, IREL shall render to CONTRACTOR all reasonable assistance that may be required by CONTRACTOR in the defence, and shall have the right to be represented therein by advisory council of its ownselection and at its own expense.

8.5 In addition to the measures specified in Clause-8.4, CONTRACTOR may further, at its option, however, in reasonable consultation with IREL, seek to abate the alleged infringement by modification of PLANT or its operation without adversely affecting the performance and/or secure for IREL immunity from suit for infringement. In such case, CONTRACTOR shall bear/ reimburse IREL all costs related to the said modification and to the said immunity.

8.6 In the event that IREL is legally restrained from operating PLANT on account of any infringement action or suit, CONTRACTOR shall take all possible actions to assist IREL to operate and use PLANT, is so far his area of operation is concerned.

8.7 Neither CONTRACTOR nor IREL shall settle or compromise any suit or action without the written consent of the other, if settlement or compromise obliges the other to make any payment or part with any property or assume any obligations or surrender any rights or to be subjected to any injunction by reason of such settlement or compromise.

9.0 INDEMNITIES:

9.1 INDEMNIFICATION FOR LIABILITIES:

9.1.1 CONTRACTOR INDEMNIFICATION FOR LIABILITIES:

To the fullest extent permitted by Law, CONTRACTOR assumes liability for and agrees to indemnify, protect, save and hold harmless IREL from and against any and all Liabilities (including, any strict liability), arising out of acts or omissions of CONTRACTOR or its personnel or its agents in the performance of its obligations under the CONTRACT causing bodily injury, sickness, disease or death, damage to or loss of any property, and whether or not involving damage to WORKS or SITE that may be imposed on, suffered orincurred by or asserted against IREL and in any way relating to or arising out of

i. WORK, any EQUIPMENT
ii. the presence, discharge, treatment, storage, transportation, disposal, escape or release of any Hazardous Substance, or the threat thereof, at, to or from SITE aftercommencement of work (any hazardous substance already existing at SITE beforecommencement of WORK excluded)
iii. The performance of WORK, or as a result of personal injuries (including wrongful death);
iv. the violation by CONTRACTOR or any SUB-CONTRACTOR/ VENDOR of any Government Approval or applicable Law;
v. Any breach of CONTRACT with any SUB-CONTRACTOR/VENDOR, provided, however, that CONTRACTOR shall not be required under this Clause to indemnifyIREL for any liability arising out of or resulting from events or circumstances occurring or existing after PRELIMINARY ACCEPTANCE OF PLANT except where the liability arises from an act or omission of CONTRACTOR or any SUB- CONTRACTOR/VENDOR or any other Person directly or indirectly employed by either of them or anyone for whose acts either of them may be liable that was a contributory cause of such liability.

9.1.2 CONTRACTOR INDEMNIFICATION FOR TAXES:

It is specifically understood that CONTRACTOR hereby accepts and assumes exclusive liability for and save and hold IREL harmless from and against of all Taxes arising from the performance of WORK, and all such Taxes shall be deemed to be included in CONTRACT PRICE, except for GST. GST at applicable rate is payable extra. Seller need to prepare E-Invoice under GST and submit monthly/ quarterly GST Return as per GST Rules. Failure to submit GST Return on time as per GST Rules may result into deductionof GST while processing Bills.

9.1.3 INDEMNIFICATION BY SUB-CONTRACTOR/VENDOR:

CONTRACTOR shall obtain from each SUB-CONTRACTOR/VENDOR, which is an affiliate, and shall use all reasonable efforts to obtain from each SUB-CONTRACTOR/ VENDOR, an indemnification materially similar in form and substance to Clause-9.1.1 and Clause-9.1.2 of which the IREL shall be named as beneficiary.

9.1.4 PAYMENT OF AMOUNTS UNDER THIS CLAUSE:

Except to the extent covered by insurance, all amounts payable and due by CONTRACTOR to IREL under this Clause shall be deducted from CONTRACT PRICE or any other amounts owed by IREL to CONTRACTOR here under. If such amounts payable by IREL to CONTRACTOR are less than the amounts payable and due by CONTRACTORunder this Clause, CONTRACTOR shall be liable to IREL for such excess and shall pay such amount to IREL immediately upon demand.

9.1.5 PERMITS AND CERTIFICATES:

CONTRACTOR shall procure, at its expense, all necessary permits, certificates and licences required by virtue of all applicable laws, regulations, ordinances and other rules in force at the place where any of the works is to be performed, and CONTRACTOR further agrees to hold IREL harmless from liability or penalty which might be imposed by reason of any asserted or established violation of such laws, regulations, ordinances or other rule. IREL shall provide the necessary permits for CONTRACTOR's personnel to undertake any work in India in connection with CONTRACT.

9.1.6 MECHANICS LIEN:

CONTRACTOR agrees to indemnify and hold harmless IREL against all labourer's material, men's and/or mechanics liens arising from its work, and shall keep the premises of IREL free from all such claims, liens and encumbrances.

10.0 WORK TO BE TO THE SATISFACTION OF ENGINEER:

The Contractor shall execute, complete and maintain the Works in strict accordance with the contract, to the satisfaction of the Engineer and shall comply with and adhere strictly to the Engineer's instructions and direction on any matter (whether mentioned in the Contract or not). The Contractor shall take instructions and directions only from the Engineer or from the Engineer's representative on any matter touching or concerning the Works.

11.0 PROGRAMME TO BE FURNISHED:

As soon as practicable after the acceptance of his tender, the Contractor shall, if required, submit to the Engineer for his approval a programme showing the order of procedure and the method in which he proposes to carry out Works and shall whenever required by the Engineer or Engineer's representative furnish for his information particulars in writing of the Contractor's arrangement for the carrying out of the Works and of the constructional plant and temporary Works which the Contractor intends to supply, use or construct as the case may be. The submission to and approval by the Engineer or Engineer's representative of such programme or the furnishing of such particulars shall not relieve the Contractor of any of his duties or responsibilities under the Contract.

12.0 CONTRACTORS SUPERINTENDENCE:

The Contractor shall give and provide all necessary superintendence during the execution of the works and as long thereafter as the Engineer may consider necessary for the proper fulfilling of the Contractor's Obligation under the contract. The Contractor or one of his competent and authorized agent approved of in writing by the Engineer (which approval may at any time be withdrawn) is to be constantly on the Works and shall give his whole time to the superintendence of the same. If such approval shall be withdrawn by the Engineer, the Contractor shall as soon as is practicable (having regard to the requirement of replacing him as here-in-after mentioned) after receiving written notice of such withdrawal, remove the agent from the Site and shall not thereafter employ him again on the Site in any capacity and shall replace him by another agent approved by the Engineer, Such authorized agent shall receive on behalf of the Contractor directions and instructions from the Engineer or (subject to the limitations of Clause 2 hereof) the Engineer's representative.

13.0 CONTRACTOR'S EMPLOYEE:

The Contractor shall provide and employ on the Site in connection with execution and maintenance of the Works.

a) Only such technical assistants and other staff as are skilled and experienced in their respective callings and such sub-agents, foreman and loading hands as are competent to give proper supervision to the work they are required to supervise and
b) Such skilled, semi-skilled and unskilled labour as is necessary for the proper and timely execution and maintenance of the Works.

13.1 The Engineer shall be at liberty to object to and require the Contractor to remove forthwith from the Works any person employed by the Contractor in or about the execution or maintenance of the Works who in the opinion of the Engineer misconducts himself or incompetent or negligent in the proper performance of his duties or whose employment is other-wise considered by the Engineer to be undesirable and such person shall not be again employed upon the Works without the written permission of the Engineer. Any person so removed from the Works shall be replaced without delay by a competent substitute approved by the Engineer.

14.0 EXTRA SUPERVISION ON WORK:

If in the opinion the Engineer, due progress is not made with the work in accordance with the contract, and or the execution thereof becomes contrary to specifications, and/or bad work is executed and/or bad materials are used or supplied by the Contractor, and/or any directions given by the Engineer are not properly complied with or attended to, the Engineer may if he considers it necessary or proper for the execution of the work in accordance with the contract, of which his certificate in writing will be sufficient evidence order the employment of extra supervising staff to supervise the work and the expenses of the employment including the salary of the supervising staff shall be provided by the Contractor, provided that the Engineer shall give to the Contractor not less than 7 days previous notice in writing of intention to exercise his power.

15.0 SETTING-OUT OF THE WORKS:

The Contractor shall be responsible for the true and proper setting out of the Works and the correctness of the position levels, dimensions and alignment of all parts of the Works and for the provision of all necessary instrument appliances and labour in connection therewith. If at any time during the progress of the works, any error shall appear or arise in the position, levels, dimensions or alignment of any part of the Works, the Contractor on being required so to do by the Engineer or Engineers representative shall at his own expense rectify such error to the satisfaction of the Engineer or Engineer's representative unless such error is based on incorrect data supplied in writing by the Engineer or the Engineer's representative in which case the expense of rectifying the same shall be borne by the Employer. The checking of any setting out or of any line or level by the Engineer or the Engineer's representative shall not in any way relieve the Contractor of his responsibility for the correctness thereof and the Contractor shall carefully protect and preserve all bench marks, site rails, pegs and other things used in setting out the works.

16.0 USE OF EXPLOSIVES:

Explosives shall not be used on the work by the contractor without the permission in writingof the Engineer and then only in the manner and to the extent to which he has prescribed.Where explosives are used, the same shall be stored in a special magazine to be provided by and at the cost of the Contractor, who shall be liable for all damages, loss or injury to any person or property & shall be responsible for complying with all the statutory obligations in these respects.

17.0 CARE OF WORKS:

The Contractor shall in connection with the Works provide and maintain at his own cost all lights, guards, fencing and watching when and where necessary or required by the Engineer or Engineer's representative or by a duly constituted authority for the protection of the Works or for the safety and convenience of the Public or others.

From the commencement to the completion of the Works, the Contractor shall take full responsibility or the care thereof and of all Temporary Works and in case any damage, loss or injury shall happen to the Works or to any part thereof or to any temporary Works from any cause whatsoever (save and except the excepted risks as defined in sub-clause(2) of the clause) shall at his own cost repair and make good the same so that at completion the Works shall be in good order and condition and in conformity in every respect with the requirements of the Contract and the Engineer's instructions. In the event of any such damage, loss or injury happening from any of the excepted risks the Contractor shall if and to the extent required by the contractor shall also be liable for any damage to the Works occasioned by him in the course of any operations carried out by him for the purpose of complying with his obligations under Clause 58 hereof.

17.1 EXCEPTED RISKS:

The "excepted risks" mentioned in Sub-clause (1) above are war hostilities (whether war be declared or not), invasion act of foreign enemies, rebellion, revolution, insurrection of military or usurped power, civil war or (otherwise than among the Contractors own employees) riot, commotion or disorder or any such operation of the forces of nature as responsible foresight and ability on the part of Contractor could not foresee or reasonably provide against (all of which are herein collectively referred to as "the excepted risks".)

18.0 USE OF LAND & BUILDINGS

a) Wherever any land or building belonging to IREL is allotted to the Contractor, the Contractor shall return vacant possession of the same land/building in good condition to IREL after the completion of works as soon as the contract is over/terminated, failing which IREL would be entitled to withhold the payment of the security deposit and/or finalbill in addition to any other action which the IREL may like to take for getting the vacant possession of the land or building as aforesaid.

b) The Contractor should obtain the prior approval of the competent authority for construction of purely temporary shed. The Contractor should submit written application accompanied by layout plan for construction of such temporary shed. Any modification/alteration if deemed necessary thereafter should be done with prior approval of the competent authority.

c) The Contractor shall have to pay licence fee for the area occupied as per rates fixed by the Management of IREL from time to time.

d) The permission for such temporary shed will be accorded only for the purpose of work as awarded to such Contractor and the temporary shed so constructed should be dismantled within 15 days from the date of completion of the maintenance work and restore the possession of vacant land in the original condition or in a condition acceptable to the Management of IREL. In case of any difficulty, the Contractor may obtain specific approval of the competent authority which may not be extended more than a period of one month in any case.

   In case of failure of the Contractor to dismantle the temporary shed and hand over the vacant possession of the premises, the department shall be compelled to dismantle the temporary shed so constructed at the risk and cost of the contractor without prejudice to any other action which may be taken including recovery of damages as per rates fixed by IREL for the unauthorized occupation of

the shed/ premises beyond the permitted period.

e) The Contractor should use such premises/shed for such purpose incidental to such awarded work and not as otherwise. It shall be the liability of the contractor to ensure that this occupation of the premises/shed does not provide to be of nuisance to the residents in the vicinity. The Contractor shall also not sublet the premises to any other party.

19.0 DAMAGES TO PERSONS AND PROPERTY:

19.1 The Contractor shall (except if and so far as the Specification provided otherwise) indemnify and keep indemnified the IREL against all losses and claims for injuries or damages to any person or any property whatsoever which may arise out of or in consequence of the construction and maintenance of the works and against all claims, demands, proceedings, damages, costs charges and expenses whatsoever in respect of or in relation thereto. Provided always that nothing hereby contained shall be deemed to render the Contractor liable for or in respect of or to indemnify the IREL against any compensation or damages for or with respect to:

(a) The permanent use or occupation of land by the works or any part thereof (save as herein -after provided) surface or other damage as aforesaid i.e. surface or other damage caused by contract works in the normal course.

(b) The right of the IREL to construct the Works or any part thereof on over under in or through any land.

(c) Interference whether temporary or permanent with any right to light, air, way or water or other easement or quasi-easement which is unavoidable result of the construction of the Works in accordance with the Contract.

Provided further that for the purposes of this clause, the expression "the land" shall be deemed to be limited to the area defined in the specification as shown on the drawings inwhich land crops, trees and structures will be disturbed or damaged as an inevitable consequence of the carrying out of the Works.

20.0 ACCIDENT OR INJURY TO WORKMEN:

a) The employer shall not be liable for or in respect of any damages or compensationpayable as per or otherwise in respect of or in consequence of any accident or injury to any workmen or other persons in the employment of the Contractor or any Sub-Contractor and the Contractor shall indemnify and keep indemnified the Employer against all such damages and compensation and against all claims, demands, proceedings, cost, charges and expenses whatsoever in respect thereofin relation there to.

b) The Contractor shall forthwith report all accidents and injuries as a result of his contractual work to the employer or his representative.

21.0 STATUTORY COMPLIANCE CONDITIONS:

21.1 GENERAL COMPLIANCE WITH APPLICABLE LAWS AND SAFETY REGULATIONS:

The Contractor/Service Provider shall ensure strict compliance with the Company's rules and regulations pertaining to safety and security at the site. The Contractor/Service Provider shall further ensure full and continuous compliance with all applicable provisions of the Four Labour Codes, namely, the Code on Wages, 2019; the Industrial Relations Code, 2020; the Occupational Safety, Health and Working Conditions Code, 2020; and the Code on Social Security, 2020, and the Central Rules notified there under, and all DGMS Circulars and AERB Safety Codes and Manuals, as amended or updated from time to time.

In the event of any violation of the above obligations, the Engineer-in-Charge (EIC) shall have the power to deduct from the money due to the Contractor/Service Provider such sum as may be required or estimated to be required to make good the loss or damage arising from such violation, without prejudice to any other right or remedy available to IREL under this Contract or applicable law.

21.2 PERSONAL PROTECTIVE EQUIPMENT (PPE):

The Contractor/Service Provider shall ensure that all workmen and supervisors deployed at the site use only approved Personal Protective Equipment (PPE) as prescribed under the Occupational Safety, Health and Working Conditions Code, 2020, the OSH (Central) Rules, 2026 and DGMS Circulars / Guidelines applicable to the nature of the work and site conditions. Non-compliance shall be treated as a breach of contract.

21.3 INSURANCE AND SOCIAL SECURITY REGISTRATION

At the time of commencement of contract work, the Contractor shall produce a copy of the valid Insurance Policy and ESI/EPF registration covering all contract workers engaged in the work. If, during the subsistence of the contract, any additional contract worker(s) is engaged, the Contractor shall ensure that such worker(s) is enrolled and covered under the applicable social security schemes prior to deployment at the site.

21.4 WAGES AND WORKING CONDITIONS

The Contractor/Service Provider shall comply with the provisions of the Code on Wages, 2019, and the applicable Central Rules notified there under, ensuring that all workers engaged in the contract receive

at least the notified Floor Wage and applicable Minimum Wages on time. Wages shall be disbursed through electronic/digital mode as required under the Code on Wages, 2019, and payment records shall be maintained and submitted to IREL on demand.

21.5 SUBMISSION OF COMPLIANCE RETURNS AND RECORDS

The Contractor shall submit copies of all statutory returns, forms, challans, and compliance reports filed under the Four Labour Codes and associated Central Rules to IREL simultaneously with their submission to the concerned statutory authority. Records of wage payments, social security contributions, accident reports, and health and safety inspections shall be maintained in the prescribed registers/formats and shall be made available for inspection by IREL or any authorised officer at all times.

21.6 INDEMNITY AND LIABILITY

The Contractor/Service Provider shall indemnify and keep indemnified IREL from and against all actions, suits, claims, demands, penalties, prosecutions, fines, losses, damages, compensation payments, costs, charges, and expenses of whatsoever nature arising from:

- The Contractor's failure or default in any statutory compliance obligation under the Four Labour Codes, Central Rules, or any other applicable law;
- Any accident, injury, death, or occupational disease of any contract worker engaged under this contract;
- Any order, notice, demand, or prosecution initiated by any court, tribunal, labour authority, Inspector-cum-Facilitator, ESIC, EPFO, DGMS, or any government authority arising from the Contractor's non-compliance;
- Non-payment or underpayment of wages, social security contributions, or other statutory dues to contract workers.

21.7 RIGHT OF IREL TO EFFECT RECOVERIES

Without prejudice to any other right or remedy, IREL shall have the right to deduct from any amounts payable to the Contractor/Service Provider under this or any other contract, such sums as may be necessary to satisfy any liability of the Contractor arising from non-compliance with applicable statutory provisions, including unpaid wages, social security dues, penalties, fines, or compensation payable to workers.

22.0 GIVING OF NOTICE AND PAYMENT OF FEES:

The Contractor shall give, all notices and pay all fees required to be given or paid to any Central or State, Statute, Ordinance or other Law or any rule, Regulation or Bye-Law of local or other duly constituted authority in relation to the execution of the Works or of any temporary works and by the rules and regulations of all public bodies whose property or rights are affected or may be affected in any way by the works or any Temporary Works.

22.1 COMPLIANCE WITH STATUTES REGULATIONS ETC.:

The Contractor shall conform in all respects with the provision of any such statute, ordinance, or Law as aforesaid and the rules, Regulations or Bye-laws of any local or other duly constituted authority which may be applicable to the Works or to any Temporary Works and with such rules and regulations of public bodies as aforesaid and shall keep the employer indemnify against all penalties and liability of every kind for breach of any such Statute, Ordinance, Law, Rules, Regulation or Bye-laws.

23.0 FOSSILS ETC.:

All fossils, coins, articles, value of antiquity and structures and other remains or things of geological or archaeological interest discovered on the site of the works shall as between the employer and the Contractor be deemed to be the absolute property of the Employer and the Contractor shall take reasonable precautions to prevent, his workmen or any other persons from removing or damaging any such article or thing and shall immediately upon discovery thereof and before removal acquaint the Engineers representative of such discovery and carry out at the expense of the employer the engineer's Representative's orders as to the disposal, removal or otherwise of the same.

24.0 (a) **PATENT RIGHTS & ROYALTIES:**

The Contractor shall save harmless and indemnify the Employer from and against all claims and proceeding for or on account of infringement of any patent rights, designs trade-mark or name or other protected rights in respect of any Constructional plant, machine, work or material used for or in connection with the Works or Temporary Works of any of them and from and against all claims, demands, proceeding, damages, cost, charges and expenses whatsoever in respect thereof or in relation there to.

(c) Except where otherwise specified, the Contractor shall pay all tollage and other royalties, rent and other payments or compensation (if any) for getting stone, sand, gravel, clay or other materials required for the Works or temporary Works or any of them.

25.0 INTERFERENCE WITH TRAFFIC ADJOINING PROPERTIES

All operations necessary for the execution of the Works and for the construction of any Temporary works shall so far as compliance with the requirements of the Contract permitsbe carried on so as not to interfere unnecessarily or improperly with the Public convenience or the access to use and occupation of public or private roads and footpathsor to or properties whether in the possession of the Employer's Workmen or of any other person and Contractor shall save harmless and indemnify employer in respect of all claims, demands, proceeding, damages, costs, charges and expenses whatsoever arisingout of or in relation to any such matters.

26.0 (a) EXTRAORDINARY TRAFFIC:

The Contractor shall use every reasonable means to prevent any of the highways and bridges communicating with or on the routes to the site from being damaged or injured by any traffic of the Contractor or any of his Sub-Contractors and in particular shall select routes, choose and use vehicles and restrict and distribute loads so that any such extraordinary traffic as will inevitably arise from the moving of plant and material from and to the site shall be limited as far as reasonably possible and so that no unnecessary damage or injury may be occasioned to such highways and bridges. For any damage caused by the breach hereof, the Contractor shall be solely responsible.

(b) WATERBORNE TRAFFIC:

Where the nature of the works is such as to require the use by the Contractor of water borne transport, the fore going provisions of this clause shall be construed as though "highway" included a dock, deck, sea wall, or other structure related to a water-way and "vehicles" included craft and shall have effect accordingly.

27.0 OPPORTUNITIES FOR OTHER CONTRACTORS:

The Contractor shall in accordance with the requirements of the Engineer afford all reasonable opportunities for carrying out their work to any other contractors employed by the Employer and their workmen and to the workmen of the Employer and of any other duly constituted authorities who may be employed in the execution on or near the site of any work not included in the Contract or of any Contract which the Employer may enter into in connection with or ancillary to the works.

28.0 SUPPLY OF PLANT, MATERIAL AND LABOUR:

Except where otherwise specified the Contractor shall at his own expense supply and provide all the Constructional Plant, Temporary Works, materials both for temporary and for permanent Works, labour (including the supervision thereof), transport to or from the Site and in and about the Works and other things of every kind required for the constructions, completion and maintenance of the Works.

29.0 DELAY IN OBTAINING MATERIALS BY THE EMPLOYER:

If the Employer has undertaken to supply materials specified in the special conditions at rates stated therein, the Contractor shall keep himself in touch with the day-to-day position regarding the supply of materials from the Engineer and so adjust the progress of the workthat their labour may not remain idle nor may there be any other claim due to or arising from delay if any, in obtaining the materials. It should be clearly understood that no claim whatsoever shall be entertained by the Employer on account of delay in supplying materials.

30.0 SITE CLEARANCE ON COMPLETION OF WORK:

On the completion of the work all rubbish, debris, vats tanks, materials, and temporary structures of any sort or kind used for the purpose of or connected with its construction are to be removed by the Contractor and all pits and excavations filled up and the site handed over in a tidy and workman like condition and no final payment in settlement of the account for the said work shall be held to be due or shall be made to the Contractor, till such site clearance shall have been effected by him, and such clearance may be madeby the Engineer, at the expense of the Contractor in the event of his failure to comply withthis provision within 7 days after receiving notice in writing from the Engineer to that effect.If it becomes necessary for the Engineer to have the site cleared as indicated above at the expense of the Contractor, the Employer shall under no circumstances, be held liablefor any losses or damages to such of Contractor's property as may be on such site due tosuch removal there from which removal may be effected by means of public sale of such materials and property or in such way as seems fit and most convenient to the Engineer.

31.0 RETURN OF SURPLUS MATERIALS:

Notwithstanding anything contained to the contrary anywhere in this contract, wherever any materials for the execution of the contract are procured with the assistance of the Employer either by issue from Employer's stocks or purchase made under orders or permits or licenses issued by the Employer, the Contractor shall use the said materials economically and solely for the purpose of the contract and not dispose of them without the permission of the Employer, and if required by the Engineer shall return to the Employer all surplus or unserviceable materials that may be left with the Contractor after the completion of the contract or at its termination, for any reason whatsoever on being paid or credited such price as the Engineer shall determine, having due regard to initial cost and the condition of the

materials at the time of such return thereof. The price to be allowed to the Contractor, however, shall not exceed the amount charged to him excluding the storage charge if any. The decision of the Engineer shall be final and conclusive. In the event of breach of the aforesaid condition, the Contractor shall in addition to making himself liable of action for contravention of the terms of the licences or permit and/or for criminal breach of trust) be liable to the Employer for payment of all moneys, advantages or profit resulting or which in the usual course would have resulted to him by reason of such breach.

WORK MATERIAL AND PLANT

32.0 QUALITY OF MATERIAL & WORKMANSHIP AND TESTS:

All materials and workmanship shall be of the respective kinds described in the Contract and in accordance with the Engineer's instructions and shall be subjected from time to time to such tests as the Engineer may direct at the place of manufacture or fabrication or on the Site or at all or any of such places. The Contractor shall provide such assistance, instruments, machines, labour and materials as are normally required for examining, measuring and testing any work and the quality, quantity or weight of any material used and shall supply samples of materials before incorporation in the Works for testing as maybe selected and required by the Engineer.

Cost of samples: All samples shall be supplied by the Contractor at his cost.

Cost of tests: The cost of making any test in performance of his works shall be borne by the Contractor.

Cost of tests not provided for:

If any test is ordered by the Engineer which is either,

a. not so intended or provided or
b. is not so particularised for or
c. though so intended or provided for is ordered by the Engineer to be carried by an independent person at any place other than the Site or the place of manufacture or fabrication of the materials tested. Then the cost of such test shall be borne by the Contractor if the test shows the workmanship of materials not to be in accordance with the provisions of the Contract or the Engineer's instructions but otherwise by the Employer.

33.0 ACCESS TO SITE:

The Employer/Engineer and any person authorised by him shall at all times have access to the Works and to the Site and to all workshops and places where work is being prepared or where materials, manufactured articles or machinery are being obtained for the Works and the Contractor shall afford every facility for and every assistance in or in obtaining theright to such access.

34.0 INSPECTION, TESTING AND EXPEDITING:

34.1 The EMPLOYER or his representatives shall have their right to inspect and/or to test the goods to conform to the specifications laid down in the CONTRACT. The SPECIAL CONDITIONS OF CONTRACT and/ or the TECHNICAL SPECIFICATIONS shall specify what inspections and test the EMPLOYER requires and where they are to be conducted. The EMPLOYER shall notify the CONTRACTOR in writing of the identity of any other representatives retained for this purpose. Expediting by EMPLOYER"s representative in no way relieves the CONTRACTOR of his obligation under the terms and conditions of this CONTRACT.

34.2 The inspections and tests may be conducted on the premises of the CONTRACTOR or his SUB-CONTRACTOR at point of completion and/or at the good's final destination. When conducted on the premises of the CONTRACTOR or his SUB-CONTRACTOR, all reasonable facilities and assistances including access to drawings and production data shall be furnished to the inspector at no charge to the EMPLOYER.

34.3 CONTRACTOR shall be held responsible for any possible delay in the approval or testingphase as well as for any possible delay in the remittance of necessary certificates. Delay on the part of the Inspection institutions will not be considered a case of 'Force Majeure'.

34.4 Participation or presence of EMPLOYER or their representatives at any tests or their failure to be present at or to witness any tests to be undertaken pursuant here to shall not in any way or manner relieve or release the CONTRACTOR from any of its warranties, guarantees or other obligations under the CONTRACT.

34.5 Copies of all test results/report of the tests shall be furnished promptly by the CONTRACTOR to EMPLOYER.

35.1 EXAMINATION OF WORK BEFORE COVERING UP:

No work shall be covered up or put out of view without the approval of the Engineer or the Engineer's representative and the Contractor shall afford full opportunity for the Engineer or the Engineer's representative to examine and measure any work which is about to be covered up or put out of view and to examine foundations before permanent work is over, any such work or foundations is or are ready or about to be ready for examination and the Engineer's representative shall without unreasonable delay

unless he considers it unnecessary and advises the Contractor accordingly attend for the purpose of examining and measuring such work or of examining such foundations.

35.2 UNCOVERING & MAKING OPENINGS:

The Contractor shall uncover any part or parts of the Works or make opening in or throughsame as the Engineer may from time to time direct and shall reinstate and make good such part or parts to the satisfaction of the Engineer. If any such part or parts have been covered up or put out of view after compliance with the requirements of sub clause(l) of this Clause and are found to be executed in accordance with the Contract, the expenses of uncovering making opening in or through reinstating and making good the same shall be borne by the Employer but in any other case all such expenses shall be borne by the Contractor and shall be recoverable from him by the Employer or may be deducted by the Employer from any moneys due or which may become due to the Contractor.

36.0 REMOVAL OF IMPROPER WORK & MATERIALS:

The Engineer shall during the progress of the Works have power to order in writing from time to time:

(a) the removal from the Site within such time or times as may be specified in the orderof any materials which in the opinion of the Engineer are not in accordance with the contract,

(b) the substitution of proper and suitable materials and

(c) the removal and proper re-execution (not withstanding any previous test there of or interim payment there for) of any work which in respect of materials of workmanship is not in the opinion of the Engineer in accordance with the contract.

37.0 DEFAULT OF CONTRACTOR IN COMPLIANCE:

In case of default on the part of the Contractor in carrying out such order, the employer shall be entitled to employ and pay other persons to carry out the same and all expenses consequent thereon or incidental thereto shall be borne by the Contractor and shall be recoverable from him by the Employer or may be deducted by the Employer from any moneys due or which may become due to the Contractor.

38.0 SUSPENSION OF WORK:

The Contractor shall on the written order of the Engineer suspend the progress of the works or any part thereof for such time or times and in such manner as the Engineer mayconsider necessary and shall during such suspension properly protect and secure the work so far as is necessary in the opinion of Engineer. Provided that the Contractor shall not be entitled to recover any such extra cost unless he gives notice in writing of his intention to claim to the Engineer within 28 days of the Engineer's order. The Engineer shall settle and determine the extra payment to be made to the Contractor in respect of such claim as the Engineer shall consider reasonable.

39.0 SUSPENSION LASTING MORE THAN 90 DAYS:

If the progress of the works or any part thereof is suspended on the written order of the Engineer for more than 90 days, the Contractor may serve a written notice on the Engineerrequiring permission within 28 days from the receipt thereof to proceed with the works or that part thereof in regard to which progress is suspended and if such permission is not granted within that time the Contractor by a further written notice so served may (but is notbound to) elect to treat the suspension where it affects part only of the Works as an omission of such part under Clause 62 thereof or where it affects the whole Works as an abandonment of the Contract by the Employer.

40.0 ISSUE OF OTHER MATERIALS FROM IREL STORES:

(i) Use of additional items:

If the Engineer directs the use of additional items of IREL stores in the work, the Contractor is bound to comply with such directions. The recovery rate for such stores shall be fixed by the Engineer.

(ii) Recovery Rates:

In addition to the above, other materials from IREL stores can be supplied subjectto availability if the Engineer is satisfied as to the necessity for such issues. Recovery rates for the materials so issued shall be IREL issue rates plus 12% plusGST as may be in force from time to time.

(iii) **Handling Conveyance etc:**

All handling, conveyance, etc. from place of issue to the worksite of the Contractorare to be borne by the Contractor and the rates quoted in the Tender Schedule cover these.

(iv) Proper accounting:

AII materials issued to the Contractor whether free of cost or on cost recoverable basis shall be properly accounted for. Any loss or damage to the stores issued by IREL will be debited to the Contractor at the IREL issue rates plus 20% plus GST as may be in force from time to time.

(v) Excess/misuse:

Steel drawn in excess or misused will be charged at 100% over issue/recovery rates as stipulated in the contract.

(vi) **Surplus stock:**
No claim will be entertained for non-supply or delay in supply of any or all the abovestores.

(vii) Except Steel, materials issued to the Contractor on recovery basis shall not normally be taken back. In case of steel and materials issued free, the surplus stock will be taken back at the stipulated rates of issue, provided they are returnedin good condition. In case of steel, rebate at full rates will be made only if the piecesare returned in length not less than 6M. Shorter pieces in the range of 4M to 6M length will be taken back @ 50% of the issue rates. The materials shall be returnedat IREL stores and all expenses towards conveyance, handling, weighing, sorting,etc. shall be at Contractor's accounts. As regards to the conditions of the materials to be returned, the decision of the Engineer shall be final and binding on the Contractor. The norms prevalent for consumption in respect of Steel shall apply forcalculating the consumption of these materials for recovery.

COMMENCEMENT TIME AND DELAYS

41.0 COMMENCEMENT OF WORK:
The Contractor shall commence the works on site within the period as mentioned in the contract and shall proceed with the same with due expedition and without delay.

42.0 WAY LEAVES ETC.:
The Contractor shall bear all expenses and charges for special or temporary way leaves required by him in connection with access to the Site. The Contractor shall also provide athis own cost any additional accommodation outside the Site required by him for the purposes of the works, except when otherwise specifically agreed and provided for.

43.0 TIME FOR COMPLETION:
Subject to any requirement in the Contract as to completion of any portion of the works before completion of the whole of the works, it shall be completed within the time stated in the LOI/Award Letter/Agreement.

44.0 EXTENSION OF TIME FOR COMPLETION:
Should the amount of extra or additional work of any kind or other special circumstances of any kind whatsoever which may occur be such as fairly to entitle the contractor to an extension of time for the completion of the work, the Engineer shall determine the amountof such extension. Provided that the Engineer as not bound to take in to account any extraor additional work or other special circumstances unless the Contractor has within 14 daysafter such work has been commenced on such circumstances have arisen or as soon thereafter as is practicable, delivered to the Engineer's representative full and detailed particulars of any claim to extension of time to which he may consider himself entitled in order that such claim may be investigated at the time.

44.1 TIME EXTENSION OF CONTRACT:
The CONTRACTOR shall promptly notify the ENGINEER-IN-CHARGE any event or conditions which might delay the completion of work in accordance with the approved schedule and the steps being taken to remedy such situation.

44.2 If the Work is delayed at any time in the commencement or during the progress of the WORK by any act, delay or neglect solely attributable to IREL or his employees, or by anyother contractor utilised by the IREL or by FORCE MAJEURE conditions, the time of completion shall be extended by IREL (without levy of Mutually Agreed Damages) in writing for a reasonable period as may be mutually agreed upon, at the time of closure of contract. The CONTRACTOR shall, immediately on occurrence of such special circumstances but not later than 14 working days, bring to the knowledge of IREL throughwritten application for any such delay as mentioned above.

44.3 IREL shall have the right to suspend the WORK in whole or in part for such time as may be necessary in order that WORKS shall be well and properly executed. In such events, suitable extension of time shall be granted to CONTRACTOR.

45.0 NO NIGHT OR SUNDAY WORK:
Subject to any provision to the contrary contained in the contract, none of the permanent work shall save as hereinafter provided be carried on during the night or on Sundays (if locally recognized as days of rest) or their locally recognized equivalent without the permission in writing of the Engineer's representative save when the work is unavoidable or absolutely necessary for the saving of life or property or for the safety of the Works in which case the Contractor shall immediately advise the Engineer's representative. Provided always that the provisions of this Clause shall not be applicable in the-case of any work which it is customary to carry out by rotary or double shifts

46.0 RATE OF PROGRESS:
The whole of the materials, plant and labour to be provided by the Contractor and the mode, manner

and speed of execution and maintenance of the work are to be of a kind and conducted in a manner to the satisfaction of the Engineer. Should the rate of progress of the works or any part thereof be at any time in the opinion of the Engineer too slow to ensure the completion of the works by the prescribed time or extended time for completion the Engineer shall so notify the Contractor in writing and the Contractor shall thereupon take such steps as the contractor may think necessary and the Engineer may approve to expedite progress so as to complete the works by the prescribed time or extended time for completion. If the work is not being carried on by day and by night and the Contractor shall request permission to work by night as well as by then if the Engineer shall grant such permission, the Contractor shall not be entitled to any additional payment for so doing but if such permission shall be refused and there shall be no equivalent practicable method of expediting the progress of the work, the time for completion shall be extended by such period as is solely attributable to such refusal. All work at night shall be carried out without unreasonable noise and disturbance. The Contractor shall indemnify the Employer from and against any liability for damages on account of noise or other disturbance created while or in carrying out the work and from and against all claims, demands, proceedings, costs, charges and expenses whatsoever in regard or in relation to such liability.

47.0 LIQUIDATED DAMGES FOR DELAYED EXECUTION OF CONTRACT:

Subject to Article -48, if the CONTRACTOR fails to deliver any or all of the GOODS or performance of the services within the time period(s) specified in the CONTRACT, the EMPLOYER shall, without prejudice to his other remedies under the CONTRACT, levy Liquidated damages from the CONTRACT PRICE, a sum calculated on the basis of the CONTRACT PRICE, including subsequent modifications.

Deductions shall apply as per following formula:

For repair works costing up to Rs. Ten lakhs (Rs 10,00,000/-) : One percent (1%) of the contract value per week subject to a maximum of ten percent (10%) of contract value

For all other works:

Half percent (0.5%) of the contract value per week of delay subject to a maximum of ten percent (10%) of contract value

47.1 EMPLOYER may deduct the amount so payable by CONTRACTOR, from any amount falling due to the CONTRACTOR or by recovery against the Performance Guarantee. Both CONTRACTOR and EMPLOYER agree that the above percentages of price reduction are genuine pre-estimates of the loss/damage which the EMPLOYER would have suffered on account of delay/breach on the part of the CONTRACTOR and the said amount will be payable on demand without there being any proof of the actual loss/or damage caused by such breach/delay. A decision of the EMPLOYER in the matter of applicability of price reduction shall be final and binding.

48.0 FORCE MAJEURE:

48.1 Force majeure is an event beyond the control of contractor and not involving the contractor's fault or negligence and which is not foreseeable. Such events may include, but are not restricted to acts of the purchaser/contractor either in its sovereign or contractual capacity, wars or revolution, hostility, acts of public enemy, civil commotion, floods, explosions, epidemics, quarantine restrictions, strikes, lockouts and freight embargoes or any other event which IREL may deem fit to consider so. The decision about force majeure shall rest with IREL which shall be final and binding.

48.2 If there is delay in performance or other failures by the contractor to perform obligations under its contract due to event of a Force Majeure, the supplier/contractor shall not be held responsible for such delays/failures.

48.3 If a Force Majeure situation arises, the contractor shall promptly notify the purchaser in writing of such conditions and the cause thereof within fifteen days of occurrence of such event. Unless otherwise directed by the EMPLOYER in writing, the CONTRACTOR shall continue to perform its obligations under the contract as far as reasonable/practical and shall seek all reasonable alternative means for performance not prevented by the Force Majeure event.

48.4 If the performance in whole or in part or any obligation under this contract is prevented or delayed by any reason of Force Majeure for a period of exceeding 120 days, IREL may aits option terminate the contract without any financial repercussion on either side.

49.0 CERTIFICATE OF COMPLETION OF WORK:

As soon as in the opinion of the Engineer the works shall have been substantially completed and shall have satisfactorily passed any final test that may be prescribed by the Contract, the Engineer shall on receiving a written undertaking by the Contractor to finish any outstanding work during the period of Maintenance issue a Certificate of completion in respect of the works and the Period of Maintenance of the works shall commence from the date of such certificate. Provided that the Engineer may give such a certificate with respect to any part of the works before the completion of the whole of the work and shall upon the written application of the contractor give such certificate with respect to any substantial part of the works, which has been both completed to the satisfaction of the Engineer and occupied or used by the employer and when any such certificate is given in respect of a part of the works such part shall be

considered as completed and the Period of Maintenance of such part shall commence from the date of such certificate. Provided also that a Certificate of Completion given in accordance with the foregoing provision of any part of the works occupied and use as aforesaid shall not be deemed to certify completion of any round or surfaces requiring reinstatement unless such certificate shall expressly so state.

50.0 MAINTENANCE AND DEFECTS:

50.1 DEFINITION OF PERIOD OF MAINTENANCE:

In these conditions, the expression "Period of Maintenance" shall be either 12 (Twelve) months or any other period if specifically specified in the special conditions of this contract,and calculated from the date of completion of the works certified by the Engineer in accordance with Clause 49 hereof or in the event of more than one certificate having been issued by the Engineer Under the said Clause from the respective dates so certified and in relation to the Period of maintenance, the expression “the works” shall be construed accordingly.

50.2 EXECUTION OF WORKS OF REPAIR ETC.:

To the intent that the works shall at or as soon as practicable after the expiration of the period of Maintenance be delivered up to the Employer in as good and perfect a condition (fair wear and tear expected) to the satisfaction of the Engineer as that in which they wereat commencement of the Period of Maintenance, contractor shall execute all such work ofrepair, amendment, reconstruction, rectification and making good of defects, imperfections, shrinkages or other faults as may be required of the Contractor in writing by the Engineer during the Period of Maintenance or within fourteen days after its expiration as a result of an inspection made by or on behalf of the Engineer prior to its expiration.

50.3 COST OF EXECUTION OF WORKS OF REPAIR ETC.:

All such work shall be carried out by the Contractor at his own expense if the necessity thereof shall in the opinion of the Engineer be due to the use of materials or workmanshipnot in accordance with the Contract or to neglect or failure on the part of the Contractor tocomply with any obligation expressed or implied on the Contractor’s part under the Contract. If in the opinion of the Engineer such necessity shall be due to any other cause,the value of such work shall be ascertained and paid for as if it was an additional work.

50.4 REMEDY ON CONTRACTOR'S FAILURE TO CARRY OUT:

If the Contractor shall fail to do any such work as aforesaid required by the Engineer, the Employer shall be entitled to carry out such work by his own workmen or by other Contractors, and if such work is the work which the Contractor should have carried out at his own cost, Employer shall be entitled to recover from the Contractor the cost thereof ormay deduct the same from any moneys due or that may become due to the Contractor.

51.0 CONTRACTOR TO SEARCH:

The Contractor shall if required by the Engineer in writing search or the cause of any defectin perfection or fault under the directions of the Engineer. Unless such defect, imperfectionor fault shall be one for which the Contractor is liable under the contract, the cost of the work carried out by the Contractor in searching as aforesaid shall be borne by the Employer. But if such defect, imperfection or fault shall be one for which the Contractor is liable as aforesaid the cost of the work carried out in searching as aforesaid shall be borneby the Contractor and he shall in such case repair, rectify and make good such defect, imperfection or fault at his own expense in accordance with the provisions of Clause 50 hereof.

52.0 ALTERATIONS, ADDITIONS AND OMISSIONS:

52.1 VARIATIONS

The Engineer shall make any variation from quality or quantity of the works or any part there of that may in his opinion be necessary and for that purpose or if for any other reason it shall in his opinion be desirable he have power to order the Contractor to do and the Contractor shall do any of the following:

a. increase or decrease the quantity of any works included in the contract.
b. omit any such work
c. change the character or quality or kind of any such work
d. change the levels, lines position and dimensions of any part of works and
e. execute additional work of any kind necessary for the completion of the works andno such variation in any way vitiate or invalidate the contract but the value (if any)of all such variations shall be taken into account in ascertaining the amount of thecontract price.

52.2 No such variation shall be made by the Contractor without an order in writing of the Engineer. Provided that no order in writing shall be required for increase or decrease in the quantity of any work where such increase or decrease is not the result of an order given under this Clause but is the result of the quantities exceeding or being less than those stated in the Tender Schedule. Provided also that if for any reason the Engineer shall consider it desirable to give any such order verbally, the contractor shall comply with such order and any confirmation in writing of such verbal order given by the Engineer whether before or after the carrying out of the order shall be deemed to be an order in writing within the meaning of this clause.

53.1 VALUATION OF VARIATIONS:

The 'Engineer shall determine the amount (if any) to be added to or deducted from the sum named in the Tender in respect of any extra or additional work done or work omitted by his order. All such work shall be valued at the rates set out in the Contract, if in the opinion of the Engineer the same shall be applicable. If the Contract shall not contain any rates applicable to the extra or additional work then reasonable prices shall be fixed by theEngineer.

53.2 POWER OF ENGINEER TO FIX RATES:

Provided that if the nature of amount of any omission or addition relative to the nature or amount of the whole of the contract work or to any part thereof shall be such that in the opinion of the Engineer the rate or price contained in the contract for any item of the workis by reason of such omission or additions rendered unreasonable or inapplicable, the Engineer shall fix such other rate or price as in the circumstances he shall think reasonableand proper.

Provided also that no increase of the Contract Price under sub-clause (1) of this clause onvariation of rate or price under sub-clause (2) of this clause shall be made unless as soonafter that date of the order as is practicable and in the case of extra or additional work before the commencement of the work or as soon thereafter as is practicable notice shall have been given in writing.

a) by the Contractor to the Engineer of his intention to claim extra payment or a variedrate or.
b) by the Engineer to the Contractor of his intention to vary a rate or price as the casemay be.

53.3 CLAIMS:

The Contractor shall send to the Engineer's representative once in every month an account giving particulars (as full and detailed as possible) of all claims for any additional expenses to which the Contractor may consider himself entitled and of all extra or additional work ordered by the Engineer which he has executed during the preceding month and no claim for payment for any such work will be considered which has not beenincluded in such particulars. Provided always that the Engineer, shall be entitled to authorize payment to be made for any such work notwithstanding the Contractor's failure to comply with this condition, if the contractor has at the earliest practicable opportunity notified the Engineer that he intends to make a claim for such work.

53.4 EXTRA ITEM:

Any extra item arising during the execution of work due to any reason shall be paid for based on the sanctioned schedule of rates or rates derived there from. The percentage quoted by the tenderer shall be applied to the rate arrived at from the schedule of rates orrates derived there from. In case the rates cannot be derived from the Schedule of rates orthe quoted rates, CPWD norms shall be followed for determination of rates. Analysis of rates on the basis of field observations shall be considered if schedule of rates/CPWD norms are not available. The rates given in the schedule are complete for labour and materials including all leads, lifts, royalty etc. except otherwise stated in the items. No extra claim on account of these items shall be entertained.

54.0 PROPERTY IN MATERIALS:

If the specification or estimate of the work provides for use of any special description of materials to be supplied from the Engineer's store, or if it is required that the Contractor shall use certain stores to be provided by the Engineer (such materials and stores, and Plants and the prices to be charged therefore, as here-in-after mentioned being so far as practicable for the convenience of the Contractor but not so as in any way to control the meaning or effect of this contract specified in the schedule or memorandum hereto annexed), the Contractor shall be supplied with such materials and stores as required fromtime to time to be used by him for the purposes of the contract only, this being calculated out from specifications, drawing etc. and the value of the full quantity of materials and stores so supplied at the rates specified in the said schedule or memorandum may be setoff or deducted from any sums then due, or thereafter to become due to the Contractor under the contract, or otherwise, or against or from the security deposit or the proceeds of sale thereof if the same is held in Government securities, the same or a sufficient portion thereof being in this case to fulfil the purpose. All materials supplied to the Contractor shall remain in the absolute property of Employer and shall not on any account be removed from the site of the work and shall at all times be open to inspection by the Engineer.

Any such materials unused and in perfectly good condition at the time of the completion of determination of the contract shall be returned to the Engineer store. If by a notice in writing under his hand he shall so require but the Contractor shall not be entitled to returnany such materials unless with such consent and shall have no claim for compensation on account of any such materials so supplied to him as aforesaid during being unused byhim or for any wastage in or damages to any such materials.

54.1 MATERIALS OBTAINED FROM DISMANTLEMENT & EXCAVATION ETC: Contractors in the course of their works should understand that all material (e.g. store andother materials obtained in the work of dismantling, excavation, etc. will be considered Employer's property) and issued to the Contractor (if they require the same for their own use) at rates approved by him. If these materials are not required by them they will be disposed off to the best advantage of Employer.

54.2 RELICS, GOLD, SILVER FOUND IN OR UPON THE SITE:

All gold, silver, oil and other minerals of any description and precious stones, coins, treasures, relics, antiquities and other similar things which shall be found in or upon the site shall be the property of the Employer, and the Contractor shall duly preserve the sameto the satisfaction of Employer and shall, from time to time deliver the same to such person or persons as the Employer may appoint to receive the same.

55.0 NO APPROVAL BY VESTING:

The operation of the Clause numbered 62 shall not be deemed to imply any approval by the Engineer of the materials or other matters referred to therein nor shall it prevent the rejection of any such materials at any time by the Engineer.

MEASUREMENT

56.0 QUANTITIES:

The quantities set out in the Tender Schedule are the approximate estimated quantities ofthe work but they are not to be taken as the actual and correct quantities of the works to be executed by the Contractor in fulfillment of his obligations under the Contract. Any itemmay be omitted or altered and no claim for compensation will be entertained on this account or for any variation however substantial it may be in the Tender Schedule.

57.0 WORKS TO BE MEASURED:

The Engineer shall except as otherwise stated ascertain and determine by measurement the value in accordance with the Contract of work done in accordance with the contract. He shall when he requires any part or parts of the Works to be measured give notice to the Contractor's authorized agent or representative who shall forthwith attend or send a qualified agent to assist the Engineer or the Engineer's representative in making such measurement and shall furnish all particulars required by either of them. Should the Contractor not attend or neglect or omit to send such agent then the measurement made by the Engineer or approved by him shall be taken to be the correct measurement of the work. For the purpose of measuring such permanent work as is to be measured by record drawings, the Engineer's representative shall prepare record drawing month by month of such work and the Contractor as and when called upon to do so in writing shall within 14 days attend to examine and agree such record drawings, with the Engineer's representative and shall sign the same when so agreed and if the Contractor does not so attend to examine and agree any such record drawings they shall be taken to be correct. If after examination of such record drawings the Contractor does not agree the same or does not sign the same as agreed, they shall nevertheless be taken to be correct unless the Contractor shall within 14 days of such examination lodge with the Engineer's representative for decision by the Engineer's notice in writing of the respects in which suchrecord drawings are claimed by him to be incorrect. The Contractor shall be paid for the quantities resulting from measurement of the executed work.

58.0 MODE OF MEASUREMENT FOR CIVIL WORKS:

The mode of measurement shall be as per Indian Standard 1200 latest, subject to the following:

(a) In case the mode of measurement is not covered by the said Indian Standard fora particular item, the method of measurement shall be as per CPWD specificationsfor that item only.

(b) Wherever a particular mode of measurement is specified in the description of the item in the tender schedule/special conditions, the same shall only apply.

(c) In case of dispute regarding mode of measurement, the decision of the Engineer shall be final and binding on the Contractor.

59.0 PAYMENT FOR WORK DONE

59.1.1 100% payment against bills for the work done (Subject to the required deductions) shall be made to the Contractor based on detailed measurements and certification of bills by the Engineer.

59.1.2 **ON ACCOUNT PAYMENT:** Bills shall be prepared and submitted by the Contractor. Jointmeasurements shall be taken continuously and need not be connected with billing stage. Based on these joint measurements recorded in the register, the Contractor shall submit the bills in both soft and hard copies (three copies) in the prescribed format along with thedetailed measurements item wise. All the pages of the measurement sheets shall be serially machine numbered and signed by the Contractor. The bills along with measurement sheet shall be computer generated and also suitably programmed for effecting the necessary corrections easily. The bills shall be accompanied with necessary documents such as abstract of quantities, variation statements, reconciliation of materials,part rate statements indicating the extent of work done, statement of secured advance claimed and fulfilling other statutory obligations such as ESI / PF / Insurance / labour licence etc. Payment against bills for the work done (Subject to necessary deductions) will be made after the verification and certification by the Engineer of the bill submitted by theContractor.

59.1.3 **COMPLETION CERTIFICATE:** The Works shall be deemed to have been completed in all respects on the day the Engineer certifies that the works have been so completed in accordance with this Contract,

takes over the completed Works and issues a certificate to that effect. The Defect Liability Period will start from the said date of completion / handingover of the work.

59.1.4 **FINAL PAYMENTS:** Based on the measurement of Work performed, the Contractor shall submit his final bill for the Works within 3 months of completion of work. The bill shall be based only on Works as measured and at accepted tender rates including rates for any additional or extra work which might have been approved by the Company. All deductions due under the Contract shall be incorporated. The final bill shall be accompanied by:

A) A copy of the Completion Certificate issued by the Engineer.

B) No Claim Certificate" in the prescribed form or a list of claims if any, not included in the final bill with full details.

The Engineer shall examine and certify the final bill for payment after satisfying that the Works have been satisfactorily completed and that all properties, works and things removed or disturbed or damaged in consequence of the Work have been properly replaced and made good and all expenses and demands incurred or made by or on the Company or in respect of any damage or loss by, from or consequence of the Works havebeen satisfied, all materials have been returned and the site cleared.

59.1.5 SECURED ADVANCE:

75% payment against bills as Secured Advance on the cost of all non-perishable materials brought by the Contractor to Site for use in the Works (excluding chargeable materials issued by the Company) as assessed and approved by the Engineer may be paid, provided the materials confirm to the specifications of the contract an accepted by the Engineer. These materials shall be pledged by the Contractor to the Company. All the Secured Advance allowed will be deducted while making payment of any bill for the work done and a fresh Secured Advance on the materials remaining then at Site will be paid along with the same bill.

59.2 BILL TO BE SUBMITTED MONTHLY:

A bill shall be submitted by the Contractor each month on or before the date by the Engineer for all work executed in the previous month and the Engineer shall take or cause to be taken the requisite measurement for the purpose of having the same verified and the claim, as far as admissible, adjusted if possible, before the expiry of ten days from the presentation of the bill. If the Contractor does not submit the bill within the time fixed as aforesaid, the Engineer may depute his representative to measure up the said work in the presence of the Contractor, whose counter signature to the measurement list will be sufficient warrant, and the Engineer may prepare a bill from such list which shall be binding on the Contractor in all respects.

59.3 BILLS TO BE ON PRINTED FORMS:

The Contractor shall submit all bills on the printed forms to be had on application at the office of the Engineer and the charges in the bills shall always be entered at the rates specified in the tender in the case of any extra work ordered in pursuance of these conditions and not mentioned or provided for in the tender at the rates herein after providedfor such work.

Invoice must contain Contractor's GST Registration number, PAN, Bank detail of Contractor, GST Registration number of IREL Factory/ Office, HSN/SAC Code for servicerendered.

59.4 RETENTION MONEY (IF PROVIDED FOR SUBMISSION IN THE TENDER):

As and by way of additional security from every progressive on account bill of the Contractor, prescribed percent of the value of the work executed shall be deducted as Retention money and kept as security deposit until the total of the amount so deducted plus the initial security (including the Earnest money) already deposited will equal the prescribed security.

59.5 SET-OFF:

a) Any sum of money due and payable to the Contractor (including security deposit returnable to him) may be appropriated/ retained/ withheld and/or set off by the Employer or Government against any claim of the Employer or Government or such other person or persons for the payment of a sum of money arising out of or under this contract or other contracts made by Contractor with the employer or Govt. or such other person or persons.

b) The Employer will be at liberty to recoup any damage/loss suffered as a result of any action on the part of the Contractor.

59.6 DEDUCTIONS FROM CONTRACT PRICE:

All costs, damages or expenses which the EMPLOYER may have paid for which, under the CONTRACT, the CONTRACTOR is liable, will be claimed by the EMPLOYER. All such claims shall be billed by the EMPLOYER to the CONTRACTOR regularly as and when they fall due. Such claims shall be paid by the CONTRACTOR within fifteen days of the receipt of the corresponding bills and if not paid by the CONTRACTOR within the said period, the EMPLOYER may then deduct the amount from any bill due or becoming due by him to the CONTRACTOR under the CONTRACT or may be recovered by action of law or otherwise, if the CONTRACTOR fails to satisfy the EMPLOYER of such claims.

59.7 TAXES APPLICABLE TO CONTRACTOR'S MANPOWER, TURNOVER, EQUIPMENTETC...

The CONTRACTOR shall be solely responsible for all taxes that may be levied on the CONTRACTOR's turnover & profit or on the earnings of any of his employees or personnelengaged by him and shall hold the EMPLOYER indemnified and harmless against any claims that may be made against the EMPLOYER in this behalf. The EMPLOYER does not undertake any responsibility whatsoever regarding any taxes levied on CONTRACTOR and/or his personnel by Centre/ State/ Local Authorities.

59.8 DEDUCTION OF INCOME TAX AT SOURCE:

Income Tax on the gross amount billed will be deducted from Contractor's bills as per Section 194 (C) of the Income Tax Act. In case of contract for consultancy or professionalservices Tax deduction at source as per Section 194 J. will be carried out

59.9 OVER PAYMENTS / UNDER PAYMENTS DETECTED DURING TECHNICAL AUDIT: The Company reserves the right to carry out post-payment audit and technical examination of the running/ final bill including all supporting vouchers etc. The Company also reserves the right to propose recoveries detected by CVC (Central Vigilance Commission) based on their audit and observations of works / bills etc. The Company further reserves the right to enforce recovery of any over payment when detected, notwithstanding the fact the amount of running / final bill may be included by one of the parties as an item of dispute before an arbitrator appointed and notwithstanding the fact that the amount of running / final bill figures in the arbitration award.

If as a result of such audit and technical examination any over payment is discovered in respect of any work done by the Contractor under the contract, the Company from the Contractor shall recover it, or if any under payment is discovered, the amount shall be dulypaid to the Contractor by the Company.

60.0 APPROVAL BY MAINTENANCE CERTIFICATE:

No certificate other than the maintenance certificate referred to in **clause 61** here of shallbe deemed to constitute approval of any work or other matter in respect of which it is issued or shall be taken as admission of the due performance of the contract or any part here of or of the accuracy of any claim or demand made by the contractor or of additionalor varied work having been ordered by the Engineer nor shall any other certificate conclude or prejudice any of the powers of the Engineer.

61.0 MAINTENANCE CERTIFICATE:

The contract shall not be considered as completed until a maintenance certificate shall have been signed by the Engineer and delivered to the Employer stating that the Works have been completed and maintained to his satisfaction. The maintenance certificate will be given by the Engineer twenty - eight days after the expiration of the Period of maintenance (or if different Periods of maintenance shall become applicable to different parts of Works the expiration of the latest such period) or as soon thereafter as any works ordered during such Period pursuant to **Clause 50 and 51** hereof shall have been completed to the satisfaction of the Engineer and full effect given to this Clause notwithstanding any previous entry on the Works of taking possession, working or using thereof or any part thereof by the Employer.

61.1 CESSATION OF EMPLOYER'S LIABILITY

The Employer shall not be liable to the Contractor for any matter or thing arising out of or in connection with the Contract or the execution of the Works Unless the Contractor shallhave made a claim in writing in respect thereof before the giving of the maintenance certificate under this Clause.

61.2 UNFULFILLED OBLIGATION:

Notwithstanding the issue of the Maintenance certificate the Contractor and (subject to sub - clause (2) of this clause) the Employer shall remain liable for the fulfillment of any obligation incurred under the provisions of the Contract prior to the issue of the Maintenance Certificate which remains un-performed at the time such certificate is issuedand for the purpose of determining the nature and extent of any such obligation, the contract shall be deemed to remain in force between the parties hereto.

62.0 URGENT REPAIRS:

If by reason of any accident or failure or other event occurring to in or in connection with the works or any part thereof either during the execution of the works or during the Period of Maintenances, any remedial or other work or repair shall in the opinion of the Engineer or the Engineer's representative be urgently necessary for security and the Contractor is unable or un-willing at once to do such work or repair, the Employer may by his own or other workmen to such work or repair as the Engineer or the Engineer's representative may consider necessary. If the work or repair so done by the Employer is work which in the opinion of the Engineer the Contractor was liable to do at his own expense under the contract, all cost and charges properly incurred by the Employer in so doing shall on demand be paid by the Contractor to the employer or may be deducted by the employer from any moneys due or which may become due to the Contractor. Provided always that the Engineer or the Engineer's representative (as the case may be) shall, as soon after the occurrence of any such emergency as may be reasonably practicable notify the Contractor thereof in writing.

63.0 RESOLUTION OF DISPUTES/ ARBITRATION:

63.1 The EMPLOYER and the CONTRACTOR shall make every effort to resolve amicably by direct informal, good faith negotiations any disagreement or dispute arising between them under or in connection with the Contract.

63.2 If, after thirty days from the commencement of such informal, good faith negotiations, the EMPLOYER and the CONTRACTOR have been unable to resolve the disagreement or dispute, the same shall be referred for resolution as per the formal mechanism as specifiedhereunder shall be applicable.

63.3 LEGAL CONSTRUCTION: The Contract shall be, in all respects be construed and operated as an Indian Contract and in accordance with Indian Laws as in force for the timebeing.

63.4 ARBITRATION:

a) All disputes and differences of any kind whatsoever arising out of or in connection with the contract or carrying out of the works (whether during the course of works or after their completion and whether before or after determination, abandonment or breach of contract) shall be referred to and settled by the person authorized and notified in writing by IREL who shall state his decision in writing. Such a decision may be in the form of a final certificate or otherwise and shall be made within a period of 30 days from the date ofreceipt of such reference to them.

b) If the CONTRACTOR is dissatisfied with the decision of such authorized person, then he may within 30 days of receipt of such decision send a written appeal to PURCHASER, represented by the Chairman and Managing Director at the registered office, Mumbai forthe same to be referred to Arbitration by a Sole Arbitrator to be appointed by mutual consent and after due approval of CMD, IREL. The Arbitration proceedings shall be conducted as per the provisions of the Arbitration and Conciliation Act, 1996. It is made clear that this Arbitration Clause shall be applicable to any and all disputes and differences between the Parties arising out of and/or relating to this CONTRACT and the Parties shall be bound to refer the same to arbitration in accordance with the procedure contemplated herein.

c) If the period of 30 days under Clause (b) has expired at any stage, stipulated in the preceding paras without any response from the CONTRACTOR before such expiry, the CONTRACTOR is deemed to have communicated his satisfaction to the decision of IRELat the relevant stage and all his rights of further appeal or as the case may be, adjudication are deemed to have been waived once and for all.

d) The seat of arbitration will be at Mumbai and the language thereof shall be English**.**

e) Notwithstanding the invocation, commencement and/or pendency any dispute resolution proceedings under this Clause 63 including arbitration under Clause 63.4, the CONTRACTOR shall continue to be bound by the provisions of the CONTRACT, if not terminated by the EMPLOYER, and shall be obligated to discharge its obligations under the CONTRACT including continuation of the WORK under the CONTRACT.

f) The CONTRACTOR shall not in any way delay or default or cause to delay or default the carrying out of the works by reason of the fact that any matter has been agreed to be referred to and / or referred to dispute resolution under Clause 63 including Arbitration under Clause 63.4.

63.5 JURISDICTION:

The courts only shall, subject to Arbitration Clause, have exclusive jurisdiction to deal withand decide any matter arising out of this contract.

64.0 ACTS OF PARLIAMENT, LOCAL AND OTHER AUTHORITIES AND BYE-LAWS:

64.1 COMPLYING WITH REGULATIONS:

64.1.1 Throughout the execution of the WORK, the CONTRACTOR shall comply with the requirements of all applicable laws and regulations, bye-laws or orders made there underand to the requirements of public, municipal and other authorities in any way affecting or applicable to the work. IREL shall, when requested by the CONTRACTOR, give all reasonable assistance to the CONTRACTOR in obtaining information concerning local conditions.

64.1.2 Before making any departure from the specification or drawings which may be necessaryto conform to such requirements, the CONTRACTOR shall give the IREL written notice specifying the departure proposed to be made and the reason for making it and applying for instructions thereon. If the CONTRACTOR does not receive such instructions within thirty (30) days, he shall conform to those requirements and inform the IREL accordingly.

64.1.3 The Contractor shall remain liable for the payments of all wages or other money to his employees or labourers under the Minimum Wages Act, Payment of Wages Act, Employees Liability Act, Workmen's Compensation Act, PF and ESI Act, applicable Labour codes or any other enactments and rules made applicable from time to time. The Contractor shall also complywith the provisions of the Apprenticeship Act, Contract Labour (Regulation and Abolition) Act, Labour codes and the Rules and Orders issued there under from time to time. The Contractor shall be liable to pay the wages directly to the workmen employed by him on the Works.

64.1.4 It is obligatory on the part of the Contractor to forward the declaration forms to the ESI authorities for

issue of ESIC numbers, make timely contribution towards ESI and PF in accordance with the provisions of relevant acts from time to time in respect of labour engaged by him for all the works executed in the Company. The Contractor should contactthe jurisdictional ESI and PF authorities and ensure to observe all formalities such as maintenance of muster rolls, opening of identification cards, making remittance etc. The Contractors / firms / establishments shall remit the PF and ESI contributions in their respective codes. However, in such cases, copies of muster roll, wage register, ESI / PF remittance, copies of the returns shall be furnished to the Engineer for verification and records while preferring bills.

64.1.5 The Contractor shall ensure compliance of any other laws, bye-laws, Acts. Statues, Rules& Regulations framed there under as appreciable in relation to its employees/workmen and establishments in mandatorily, even though not explicitly mentioned here. It shall be the responsibility of the Contractor to get itself acquainted about them adequately.

65.0 BREACH OF TERMS, SUSPENSION AND TERMINATION:

65.1 BREACH OF TERMS:

Breach of any of the terms of the Contract, the EMPLOYER shall be entitled, without prejudice to any and all other remedies available to it, without incurring any liability what- so-ever, to fore-bear from doing such acts or fulfilling such obligations as are to be done or fulfilled by it here under until the CONTRACTOR on terms herein makes good the saidbreach;

65.2 SUSPENSION:

65.2.1 IREL may suspend the Works in whole or in part at any time by giving the CONTRACTOR a notice in writing, if the CONTRACTOR shall be in breach of this Contract or shall fail to perform any of its obligations under this Contract, including the carrying out of the Works; provided that such notice of suspension (i) shall specify the nature of the breach or failure, and (ii) shall provide an opportunity to the CONTRACTOR to remedy such breach or failure within a period not exceeding 30 (thirty) days after receipt by the CONTRACTOR of such notice of suspension.

65.2.2 On receiving the notice of suspension from IREL, the CONTRACTOR shall stop all such work, which IREL has directed to be suspended with immediate effect. IREL may at any time cancel the suspension notice for all or any part of suspended work by giving written notice to the CONTRACTOR specifying the part of work to be resumed and the effective date of suspension withdrawal. The CONTRACTOR shall resume the suspended work onimmediately upon receipt of such withdrawal of suspension notice. In the event of suspension of work, IREL shall not be liable to the CONTRACTOR for any damage and loss.

65.3 TEMPORARY SUSPENSION:

65.3.1 IREL may at any time temporarily suspend the progress of work being performed under the Contract or any part thereof by notice in writing to the CONTRACTOR. All the work sosuspended shall be resumed by the CONTRACTOR and extended as assessed and deemed fit by IREL.

65.3.2 IREL will not pay the CONTRACTOR for any work, which is performed during such an interval of suspension, and IREL shall not be liable to the CONTRACTOR for any damagesor loss caused by such suspension of work.

65.4 EVENT OF DEFAULT:

Event of Default means the CONTRACTOR Event of Default or IREL Event of Default or both as the context may admit or require.

65.4.1 CONTRACTOR EVENT OF DEFAULT:

Any of the following events shall constitute an event of default by the CONTRACTOR ("CONTRACTOR Event of Default");

a) the CONTRACTOR fails to remedy any breach hereof or any failure in the performance of its obligations hereunder, as specified in a notice of suspension pursuant to Sub-clause 65.2 hereinabove, within 30 (thirty) days of receipt of such notice of suspension or within such further period as IREL may have subsequently granted in writing;
b) The CONTRACTOR fails to commence the Works ;
c) The CONTRACTOR fails to ensure that Works Completion Date of the Plant is achieved as per schedule mentioned in the contract/ agreement;
d) Any representation made or warranties given by the CONTRACTOR under this Contract is found to be false or misleading;
e) The transfer, pursuant to law of either (a) the rights and/or obligations of the CONTRACTOR under the Contract, or (b) all or material part of the CONTRACTOR; except where such transfer in the reasonable opinion of IREL does not affect the ability of the CONTRACTOR to perform, and the CONTRACTOR has the financial and technical capability to perform. its material obligations under the Contract;
f) The CONTRACTOR suspends or abandons the Works without prior consent of IREL, provided that the CONTRACTOR shall be deemed not to have suspended/ abandoned operation if such

suspension/ abandonment was (i) as a result of Force Majeure Event and is only for the period such Force Majeure is continuing, or (ii) is on account of a breachof its obligations under the Contract by IREL;

g) the CONTRACTOR becomes insolvent or bankrupt or enters into any agreement with its creditors for relief of debt or take advantage of any law for the benefit of debtors or goes into liquidation or receivership whether compulsory or voluntary;

h) the CONTRACTOR fails to comply with any final decision reached as a result of arbitration proceedings pursuant to Clause 63 hereof;

i) the CONTRACTOR submits to IREL a statement which has a material effect on the rights, obligations or interests of IREL and which the CONTRACTOR knows to be false;

j) any document, information, data or statement submitted by the CONTRACTOR in its Bid,based on which the CONTRACTOR was considered eligible or successful, is found to befalse, incorrect or misleading; or

k) The CONTRACTOR repudiates the Contract or otherwise evidences an intention not to be bound by the Contract.

65.4.2 IREL EVENT OF DEFAULT:

The following events shall constitute events of default by IREL (**"IREL Event of Default"),** unless any such IREL Event of Default has occurred as a result of CONTRACTOR Event of Default or due to a Force Majeure Event:

a) IREL is in breach of the Contract and has failed to cure such breach within sixty (60) daysof receipt of notice in that behalf from the CONTRACTOR;

b) IREL repudiates the Contract or otherwise evidences an intention not to be bound by thisContract;

c) Any representation made or warranties given by IREL under the Contract is found to befalse or misleading.

65.5 RECOURSE TO EVENT OF DEFAULT:

65.5.1 In case of an event of default, the following recourse is available to IREL and the CONTRACTOR or both as the situation may warrant:

a) In case of occurrence of Event of Default mentioned in Sub-clause a and Sub-clause b ofClause 65.4.1, the CONTRACTOR shall have an option to ask for extension from IREL specifying the conditions that have restricted the CONTRACTOR to complete the tasks in stipulated time. However, IREL"s decision on said matter shall stand final as the case maybe;

b) In case of occurrence of any other Event of Default in Clause 65.4.1, IREL shall be entitled to terminate this CONTRACT as per Clause 65.6 herein.

c) In case of occurrence of Event of Default mentioned in Sub-clause 65.4.2, the CONTRACTOR shall have an option to seek Termination of this Contract. In seeking the Termination of the Contract, CONTRACTOR would have to clearly demonstrate that the Event of Default has occurred despite all possible steps taken by CONTRACTOR to avoidTermination. The Parties shall mutually decide the modalities of Termination.

65.6 TERMINATION DUE TO CONTRACTOR EVENT OF DEFAULT:

65.6.1 Without prejudice to any other right or remedy which IREL may have in respect thereof under the Contract, upon the occurrence of an CONTRACTOR Event of Default, IREL shall be entitled to terminate the Contract by issuing a Termination Notice (the **"Termination Notice"**) to the CONTRACTOR, provided that before issuing the Termination Notice, IREL shall by a notice in writing inform the CONTRACTOR of its intention to issue the Termination Notice (the **"Preliminary Notice"**). In case the underlying breach/default is not resolved within a period of sixty (60) days from the dateof the Preliminary Notice, IREL shall be entitled, to terminate the Contract by issuing the Termination Notice.

65.6.2 Upon termination of the Contract by notice of either Party to the other pursuant to Sub- clauses 65.5.1 b or 65.5.1 c hereof, the CONTRACTOR shall, immediately upon dispatch or receipt of such notice, take all necessary steps to bring the Works to a close in a promptand orderly manner and shall make every reasonable effort to keep expenditures for this purpose to a minimum.

65.7 PAYMENT UPON TERMINATION:

65.7.1 Upon termination of this Contract pursuant to Sub-clauses 65.5.1 c hereof, IREL shall make the following payments to the CONTRACTOR (after offsetting against these payments any amount that may be due from the CONTRACTOR to IREL):

Remuneration pursuant to Schedule of rates hereof for Works satisfactorily performed prior to the date of termination;

65.8 DISPUTES ABOUT EVENTS OF TERMINATION:

65.8.1 If either Party disputes whether an event specified in Sub-clause 65.4.1 or in Sub-clause 65.4.2 hereof has occurred, such Party may, within 30 (thirty) days after receipt of notice of termination from the other Party, refer the matter to arbitration pursuant to Sub-clause hereof.

66.0 LIMITATION OF LIABILITY:

Notwithstanding anything contrary contained herein, the aggregate total liability of Contractor under the Contract or otherwise shall be limited to 100% of contract price. However, neither party shall be liable to the other party for any indirect and consequentialdamages, loss of profits or loss of production.

67.0 METHOD OF BLACKLISTING VENDORS:

67.1 Any failure by the vendor (CONTRACTOR) to supply/execute the contract as per order may result in blacklisting of vendor by the authority competent to conclude the contract. The blacklisted vendor shall not be considered for a minimum period of one year from thedate of black listing.

67.2 Further, the competent authority may blacklist the bidder, if the bidder changes bid either techno-commercial and / or price or withdraw his bid after receipt of the same and during the validity period of bid.

67.3 Further, the vendor (CONTRACTOR) shall be banned from doing any business with IRELin case of

a. If security considerations including question of loyalty to the state so warrant.

a. If the proprietor of the firm, its partner or representative is convicted by a court of law following prosecution for offences relating to business dealings.

b. If there is strong justification for believing that the proprietor or employee or representative of the CONTRACTOR has been guilty of malpractice such as bribery, corruption, fraud, substitution of tenders, interpolation, misrepresentation, evasion or habitual default in payment of any tax levied by law, etc.

67.4 An order for ban/ suspension passed for a certain specified period shall be deemed to have been automatically revoked on expiry of that specified period and it will not be necessary to issue a specific formal order of revocation, except that an order of suspension/ban passed on account of doubtful loyalty or security consideration shall continue to remain in force until it is specifically revoked.

67.5 An order of ban on grounds of conviction by Court of Law may be revoked if, in respect of the same facts, the accused has been wholly acquitted by a court of law.

68.0 SECRECY

The CONTRACTOR shall not at any time during the pendency of the contract or there after disclose any information furnished to them by IREL or any drawings, designs, reports and other documents and information prepared by the Contractor for this contract, withoutthe prior written approval of IREL except in so far as such disclosure is necessary for the performance of the Contractor's work and service hereunder.

69.0 LABOUR:

(a) In respect of all labour directly or indirectly employed by the Contractor, Labour Rules, on the work, it shall be the bounden duty of the Contractor to abide by and to strictly comply with all labour legislations, as may be applicable, enacted by the parliament or by the State Legislature and the rules/regulations framed there under by the Central or State Government or Local Authorities providing for the conditions of employment protection of health, Sanitary arrangements, wages, provident fund, gratuity, welfare, and safety of workmen. These rules and statutoryobligations shall be deemed to be part of the Contract. Instructions issued by the Employer in this behalf from time to time shall be equally binding on the contractor& the Contractor shall observe them stringently.

(b) In the event of the Contractor failing to discharge his obligations imposed upon himby or under any statute as aforesaid, the employer shall be entitled to rescind the Contract. at the sole risk and cost of the Contractor and/or recover from him the amount of loss sustained by the Employer.

(c) It is advisable for the Contractor to properly and fully acquaint himself with all the legislations as applicable to his workmen and the work under this contract or in connection herewith, so as to preclude the possibility of infringement and noncompliance thereof and to make it easy for him to observe clause 69 without any deviation.

(d) The Contractor shall maintain records, registers in respect of workers employed by him as required under various statutes and or prescribed by the Employer, shall issue attendance cards to each worker and shall produce the same for inspection on demand to the authorities under statutes or to the authorised representativesof the Employer.

(e) All payments of whatever nature to be made by the Contractor to his workmen shall be made in the presence of an authorised representative of Employer and Employer's representative shall sign the acquaintance in token of having witnessed the payment, as prescribed under law.

(f) The first R.A. bill of the Contractor shall be released only after HRM (Welfare Section) gives clearance regarding compliance of all statutory provisions by the contractor. Final bill of the Contractor shall be cleared only when a clearance certificate is issued by the Contractor from an authority declared for the purpose by the Employer, that the claims of workmen in respect of wages, workmen's compensation, statutory payments etc. have been paid by Contractor to his workmen in full and subject to fulfilment of other conditions of Contract. Labour Rules etc.

(g) The Contractor shall be entirely responsible for safe and good conduct of his employees during the

period of his contract. The Contractor shall also ensure, thatno safety rules/instructions are violated by him or his workmen. The Contractor shall maintain his machineries and tools for work in safe condition and shall present the same for checking whenever called by Employer/ his representatives.

(h) It shall be binding on the part of the Contractor to familiarise himself and be governed by all statutes such as Mines Act 1952, Rules and Regulations includingamendments made there under, if any, applicable for the work, Indian Electricity Act. 1910 and Indian Electricity Rules 1956 including amendments, if any applicable for the work.

(i) The Contractor shall provide and ensure proper use of safety appliances by his workmen throughout the course of their employment.

(j) The Contractor in fulfilment of his statutory obligations imposed by or under variousLabour Laws, will among other things:

i) Arrange to provide cool and wholesome drinking water at appointed place/places near work site. The container of water shall be in hygienic condition.

ii) Implement the Employees Provident Fund Scheme or Produce exemptioncertificate from Regional Provident Fund Commissioner if they are so exempted otherwise, bills for the work will be released withholding 10% from such sums or as decided by the Management from time to time till such time they implement the scheme or produce exemption certificate from the Regional Provident Fund Commissioner. The Contractors are further required to indemnify Employer against any loss or damage, whatsoever that may be suffered by Employer as a result of any claim. Damage or penalties for any failure or non-compliance on their (Contractor's) part with the provisions of the aforesaid Act and Scheme framed there under.

(k) The Contractor shall arrange to get his workmen trained under Mines Vocational Rules-1966 at the Training Department of the Company and shall pay all statutoryallowances for such training to his workmen under training. The Contractor shall ensure the proper use of safety appliances by his workmen throughout the courseof their employment.

70.0 RETURNS OF LABOUR:

The Contractor shall if required by the Engineer deliver to the Engineer's representative or at his office a return in detail in such from and at such intervals as the Engineer may prescribe showing the numbers of the labour from time to time employed by the contractor on the Site.

71.0 LABOUR LICENCE:

i. The Contractor shall have to obtain a licence from Asst. Labour Commissioner (Licensing Authority) within time from the award of the Contract under Contract Labour (Regulation and Abolition) Act. 1970 or labour code, whichever is prevailing and legally enforceable at the time of execution and shall have to comply with all the provisions of the Act and Rules framed there under and shall ensure that no violations are pointed out by the Authorities under the Act.

ii. The RA Bills of the contract shall not be released until the licence for the number of labour employed under Contract Labour (Regulation and Abolition) Act, 1970 or labour code, whichever is prevailing and legally enforceable at the time has been produced by the Contractor to the office of the employer. Whenever the number is increased, the Contractor shall arrange to get such changes incorporated in the licence.

iii. The Contractor shall make payment to their workmen in the presence of authorisedrepresentative of the Employer only, and obtain the required certificate regarding witnessing of payments.

72.0 WOMEN LABOUR:

The working hours of women labour employed by the Contractor/ tenderer shall conform to the relevant labour acts in force. They shall not be detained after 7.00 PM and employed before 6.00 AM and in no case employed during the night time.

73.0 EMPLOYMENT OF CHILDREN:

No child below the age of 18 years shall be employed. If children/young persons in the work premises are employed contravening the provision of the Factories Act, 1948/Labour code, whichever is prevailing and legally enforceable at the time, and rules framed there under, their agreement/ contract is liable to cancellation and/or termination without any compensation or notice.

74.0 ENTRY PASS:

All representatives and workers of Contractor shall possess the Entry Pass issued from the Security Dept. and concerned Officer/Engineer shall have the right to refuse the Entrypasses to any worker or representative of the Contractor without assigning any reason. Permission to enter the Plant to any representative or worker of the Contractor may be suspended or withdrawn at any time by the Security Dept. or concerned Officer/Engineerwithout assigning any reason. The Contractor(s) shall ensure that any gate pass issued to their workmen or representatives by authorities are not misused by the unauthorized persons for entry in the plant area/in specified area inside the plant.

75.0 SAFE CUSTODY OF ENTRY PASS:

The Contractor shall be governed by the following provisions for enforcing safe custody and proper use of gate passes that may be issued to him for entry into the Plant area:

- **i.** it shall amount breach of rules and regulations regarding entry into a prohibited place by Contractors in case any entry passes issued on their demand are found to be misused by any unauthorised person (s).
- **ii.** It shall also amount to breach of terms of the contract for which the employer reserves the right to terminate the contract at any stage at the risk and cost of theContractor.
- **iii.** Final payment would be made to the Contractor only after all the passes issued by the Security Department are surrendered to the Security Department for cancellation for which 'No Demand Certificate' should be obtained.
- **iv.** In case of passes lost/ not surrendered for any reason an amount as fixed shall belevied as penalty before final payments are cleared or as amended from time to time. No Dues Certificate will not be issued unless all the statutory payments to contract labour including retrenchment benefits, gratuity etc. are paid and a copy of full and final payment Muster Roll duly witnessed by the nominee of employer issubmitted to Welfare Dept. by the contractor The Contractor may be debarred in case he is found that he is not complying with the statutory provisions.

76.0 LIABILITY FOR ACCIDENTS AND DAMAGES:

76.1 The CONTRACTOR shall be responsible for loss or damage to the PLANT and provide new equipment and machineries in lieu of equipment/machineries lost/ damaged beyond repairs, free of cost until the PLANT is handed over after successful completion of performance guarantee test run.

Notwithstanding the provisions in the CONTRACT, the CONTRACTOR shall not be responsible for any loss or damage to the PLANT or any part thereof if and to the extent that such loss or damage is not covered by insurance coverage such as War risk, providedthe same is general exclusion of the policy of the EAR insurance. War Risks shall mean any of the following events occurring within India: War, hostilities, warlike operations (whether a state of war be declared or not), invasion, act of foreign enemy, civil war, rebellion, terrorism, revolution, insurrection, mutiny, usurpation of civil or military government, conspiracy, riot, civil commotion, mine, bomb, shell, grenade or other projectile, missile, munitions or explosive of war.

76.2 The CONTRACTOR shall indemnify the IREL in respect of all damage or injury to any person or to any property (other than property forming part of the Work) and against all actions, suits, claims, demands, costs, charges and expenses arising in connection therewith which shall have been occasioned by the negligence of the CONTRACTOR or any SUB-CONTRACTOR, or by defective design (other than a design made, furnished or specified by the IREL and which the CONTRACTOR has disclaimed responsibility in writing within a reasonable time after receipt of the IREL's instructions), material or workmanship, any breach of the CONTRACTOR's obligations.

77.0 SAFETY CLAUSES:

Before commencement of the work, the Contractor will give an undertaking in writing that they would abide by the safety Rules and Regulations laid down by the organization rigorously and any deviation from this would make them liable for action.

i. SAFETY CLEARANCE:

Along with contract document and job instructions from the contracting department, the Contractor will come to Safety & Training Dept. where he will be further briefed and Contractor's Safety Management Policy will be explained. The Contractor will notbe permitted to start the job without getting a written safety clearance from Safety & Training Dept.

ii. SHUTDOWNS

The contracting department would take necessary shutdowns wherever there are hazards of gases, electricity, moving machinery, etc. The Contractor shall ensure that the shutdowns/ clearance are taken before sending workers in such locations.

iii. WORK AT HEIGHT

Whenever work at height is involved Contractor should obtain passes to work at height for these persons who will be required to work at height from Safety & Training Dept. Rope access systems and Personal protective Equipment for protection against fall as per ISO-22846-1:2003 and 22846-2:2012. No extra cost shall be paid for this special safety arrangement.

iv. INJURY TO WORKMEN

The Contractor after preliminary examination at PHC may take his injured workmen tohis own Doctor with permission from the Doctor at PHC at his own risk giving an undertaking to that effect in writing to the Doctor. He will, however, have to keep S&T Dept. informed about the nature of the injury and the period for which the injured person is off duty on account of injury.

v. RESPONSIBILITY FOR ACCIDENTS

The Contractor shall be fully, responsible for accidents caused due to his or his agent'sor workmen's

negligence or carelessness in regard to the observance of the safety requirements and shall be liable to pay compensation for injuries and delay work due to these accidents.

vi. PRECAUTIONS & SUPERVISION:
The Contractor shall take all safety precautions and provide adequate supervision in order to do the job safely and without damage to equipment.

vii. SAFETY CODE
The Contractors shall strictly follow the IREL Safety Code and also the instructions issued by the Safety & Training Dept. from time to time. Before starting the work, the Contractor shall meet the safety Officer and get himself familiar with the safety measures to be taken during the execution of the job. The contractor shall be personally responsible for the safety of his workmen and shall be liable for prosecutionin case of any accident.

viii. OTHER ACTS RULES ETC.
Notwithstanding the above clauses, there is nothing in these conditions to exempt theContractor from the operations of any other Act or Rule in force in the Republic of India.

ix. FAILURE TO OBSERVE SAFETY RULES:
Failure to observe the safety rules will make the Contractor liable to penalty by way ofsuspension of work, fine and termination of contract.

x. SAFE USE OF VEHICLES:
It will be entirely the responsibility of the Contractor to ensure that the vehicles are notdriven with so high speed or in so reckless or rash manner as to cause accident or prove to be potential threat to the safety of the traffic. Where the speed limits have been fixed, they will be strictly adhered to by the Contractor's drivers who will also adhere to slow and safe driving inside the Plant and Township Area. Failure to complywith the above may result in termination of the contract.

xi. THEFT ETC.
Similarly, if a driver or any staff of the Contractor is caught in theft case or in any unauthorized movement of materials or in the activity which is punishable under the law or not authorized by the Plant, the Contractor will bear the full responsibility for theloss and other consequences which may result to the Plant due to such illegal/ unauthorized acts besides the action to terminate the contract by the Plant.

xii. COMPENSATION:
In case of accident or injury or damages caused by the Contractor's vehicle or staff toany person or property, the financial responsibility to compensate be borne solely by the Contractor and this amount may, at the discretion of the competent authority of IREL, be recovered from the bills or Security or other deposits of the Contractor.

xiii. PRECAUTIONS FOR VEHICULAR TRAFFIC:
Suitable safety precautions must be taken by the Contractor for his vehicular traffic at the level crossing/roads inside the Plant/ Township area. Contractors would be using those roads on their own risk and responsibility without any liability on the part of IRELManagement.

78.0 INSURANCE:

78.1 GENERAL:

CONTRACTOR shall at his own expense arrange, secure and maintain insurance with reputed insurance companies to the satisfaction of the EMPLOYER as follows:

CONTRACTOR at his cost shall arrange, secure and maintain insurance as may be necessary and to its full value for all such amounts to protect the WORKS in progress fromtime to time and the interest of EMPLOYER against all risks as detailed herein. The form and the limit of such insurance, as defined here in together with the under works thereof in each case should be as acceptable to the EMPLOYER. However, irrespective of work acceptance the responsibility to maintain adequate insurance coverage at all times duringthe period of CONTRACT shall be that of CONTRACTOR alone. CONTRACTOR's failurein this regard shall not relieve him of any of his responsibilities and obligations under CONTRACT.

Any loss or damage to the equipment, during ocean transportation, port/custom clearance,inland and port handling, inland transportation, storage, erection and commissioning till such time the WORK is taken over by EMPLOYER, shall be to the account of CONTRACTOR.

CONTRACTOR shall be responsible for preferring of all claims and make good for the damage or loss by way of repairs and/or replacement of the parts of the Work damaged or lost. CONTRACTOR shall provide the EMPLOYER with a copy of all insurance policiesand documents taken out by him in pursuance of the CONTRACT. Such copies of document shall be submitted to the EMPLOYER immediately upon the CONTRACTOR having taken such insurance coverage. CONTRACTOR shall also inform the EMPLOYER at least 60(Sixty) days in advance regarding the expiry, cancellation and/or changes in any of such documents and ensure revalidation/renewal etc., as may be necessary wellin time.

Statutory clearances, if any, in respect of foreign supply required for the purpose of replacement of equipment lost in transit and/or during erection, shall be made available by the EMPLOYER. CONTRACTOR shall, however, be responsible for obtaining requisitelicences, port clearances and other formalities relating to such import. The risks that are to be covered under the insurance shall include, but not be limited to the loss or damage in handling, transit, theft, pilferage, riot, civil commotion, weather conditions, accidents of all kinds, fire, war risk (during ocean transportation only) etc. The scope of such insurance shall cover the entire value of supplies of equipments, plants and materials to be importedfrom time to time.

All costs on account of insurance liabilities covered under CONTRACT will be to CONTRACTOR's account and will be included in VALUE OF CONTRACT. However, the EMPLOYER may from time to time, during the currency of the CONTRACT, ask the CONTRACTOR in writing to limit the insurance coverage risk and in such a case, the parties to the CONTRACT will agree for a mutual settlement, for reduction in VALUE OF CONTRACT to the extent of reduced premium amounts.

78.2 CONTRACTOR as far as possible shall cover insurance with Indian Insurance Companies, including marine Insurance during ocean transportation.

i. EMPLOYEES' STATE INSURANCE ACT:

The CONTRACTOR agrees to and does hereby accept full and exclusive liability for the compliance with all obligations imposed by the Employees" State Insurance Act 1948 and the CONTRACTOR further agrees to defend, indemnify and hold EMPLOYER harmless for any liability or penalty which may be imposed by the Central, State or Local authority by reason of any asserted violation by CONTRACTOR or SUB-CONTRACTOR of the Employees' State Insurance Act, 1948, and also from all claims, suits or proceeding that may be brought against the EMPLOYER arising under, growing out of or by reasons of the work provided for by this CONTRACTOR, by third parties or by Central or State Government authority or any political sub- division thereof.

The CONTRACTOR agrees to fill in with the Employee's State Insurance Corporation, theDeclaration Forms, and all forms which may be required in respect of the CONTRACTOR's or SUB-CONTRACTOR's employees, who are employed in the WORKprovided for or those covered by ESI from time to time under the Contract. The CONTRACTOR shall deduct and secure the agreement of the SUB- CONTRACTOR to deduct the employee's contribution as per the first schedule of the Employee's State Insurance Act from wages and affix the Employees Contribution Card at wages payment intervals. The CONTRACTOR shall remit and secure the agreement of SUB-CONTRACTOR to remit to the State Bank of India, Employee's State Insurance Corporation Account, the Employee's contribution as required by the Act. The CONTRACTOR agrees to maintain all cards and Records as required under the Act in respect of employees and payments and the CONTRACTOR shall secure the agreementof the SUB- CONTRACTOR to maintain such records. Any expenses incurred for the contributions, making contributions or maintaining records shall be to theCONTRACTOR's or SUB-CONTRACTOR's account.

The EMPLOYER shall retain such sum as may be necessary from the total VALUE OF CONTRACT until the CONTRACTOR shall furnish satisfactory proof that all contributions as required by the Employees" State Insurance Act, 1948, have been paid. This will be pending on the CONTRACTOR when the ESI Act is extended to the place of work.

ii. WORKMEN COMPENSATION AND EMPLOYER'S LIABILITY INSURANCE: Insurance shall be effected for all the CONTRACTOR's employees engaged in theperformance of this CONTRACT. If any of the work is sublet, the CONTRACTOR shall require the SUB-CONTRACTOR to provide workman's compensation and employer's liability insurance for the latter"s employees if such employees are not covered under theCONTRACTOR's Insurance.

iii. TRANSIT INSURANCE:

In respect of all items to be transported by the CONTRACTOR to the SITE of WORK, the cost of transit insurance should be borne by the CONTRACTOR and the quoted price shall be inclusive of this cost.

iv. COMPREHENSIVE AUTOMOBILE INSURANCE:

This insurance shall be in such a form as to protect the Contractor against all claims for injuries, disability, disease and death to members of public including EMPLOYER"s men and damage to the property of others arising from the use of motor vehicles during on or off the `site" operations, irrespective of the Employer ship of such vehicles.

v. COMPREHENSIVE GENERAL LIABILITY INSURANCE:

a) This insurance shall protect the Contractor against all claims arising from injuries, disabilities, disease or death of member of public or damage to property of others due to any act or omission on the part of the Contractor, his agents, his employees, his representatives and Sub-Contractor"s or from riots, strikes and civil commotion.

b) Contractor shall take suitable Group Personal Accident Insurance Cover for taking care of injury, damage or any other risks in respect of his Engineers and other Supervisory staff who are not covered under Employees" State Insurance Act.

c) The policy shall cover third party liability. The third party liability shall cover the loss/ disablement of human life (person not belonging to the Contractor) and also cover the risk of damage to others materials/ equipment/ properties during construction, erection and commissioning at site. The value of third party liability for compensation for loss of human life or partial/full disablement shall be of required statutory value but not less than Rs. 2 lakhs per death, Rs. 1.5 lakhs per full disablement and Rs. 1 lakh per partial disablement and shall nevertheless cover such compensation as may be awarded by Court by Law in India and cover for damage to others" equipment/ property as approved by the Purchaser. However, third party risk shall be maximum to Rs. 10 (ten) lakhs to death.

d) The Contractor shall also arrange suitable insurance to cover damage, loss, accidents, risks etc., in respect of all his plant, equipments and machinery, erection tools & tackles and all other temporary attachments brought by him at site to execute the work.

e) The Contractor shall take out insurance policy in the joint name of EMPLOYER and Contractor from one or more nationalised insurance company from any branchoffice at Project site.

f) Any such insurance requirements as are hereby established as the minimum policies and coverage which Contractor must secure and keep in force must be complied with, Contractor shall at all times be free to obtain additional or increased coverage at Contractor's sole expenses.

vi. ANY OTHER INSURANCE REQUIRED UNDER LAW OR REGULATIONS OR BYEMPLOYER:
CONTRACTOR shall also carry and maintain any and all other insurance(s) which hemay be required under any law or regulation from time to time without any extra cost to EMPLOYER. He shall also carry and maintain any other insurance which may be required by the EMPLOYER.

79.0 GENERAL

79.1 In the event that terms and conditions stipulated in the General Conditions of Contractshould deviate from terms and conditions stipulated in the Contract, the latter shall prevail.

79.2 LOSSES DUE TO NON-COMPLIANCE OF INSTRUCTIONS:
Losses or damages occurring to the EMPLOYER owing to the CONTRACTOR"sfailure to adhere to any of the instructions given by the EMPLOYER in connection with the contract execution shall be recoverable from the CONTRACTOR.

79.3 RECOVERY OF SUMS DUE:
All costs, damages or expenses which the EMPLOYER may have paid, for which under the CONTRACT CONTRACTOR is liable, may be recovered bythe EMPLOYER (he is hereby irrevocably authorized to do so) from any money due to or becoming due to the CONTRACTOR under this Contract or other Contracts and/or may be recovered by action at law or otherwise. If the same due to the CONTRACTOR be not sufficient to recover the recoverable amount, the CONTRACTOR shall pay to the EMPLOYER, on demand, the balance amount.

79.4 PAYMENTS, ETC. NOT TO AFFECT RIGHTS OF THE EMPLOYER:
No sum paid on account by the EMPLOYER nor any extension of the date for completion granted by the EMPLOYER shall affect or prejudice the rights of the EMPLOYER against the CONTRACTOR or relieve the CONTRACTOR of his obligation for the due fulfillment of the CONTRACT.

79.5 CUT-OFF DATES:
No claims or correspondence on this Contract shall be entertained by the EMPLOYER/Consultant after 90 days after expiry of the performance guarantee(from the date of final extension, if any).

79.6 PARAGRAPH HEADING:
The paragraph heading in these conditions shall not affect the construction thereof.

80.0 EARNEST MONEY DEPOSIT (EMD)/ BID SECURITY

80.1 Earnest Money Deposit (EMD) is a deposit received from the tenderers in token of their earnestness in submitting their offer to undertake the supplies/works/services/consultancy contracts and conclude a contract if entrusted to them on the basis of their tender.

80.2 EMD is to be remitted by way of 'Insurance Surety Bonds' or 'account payee demand draft' or 'fixed deposit receipt' or 'bankers cheque' or 'Bank Guarantee from any scheduled commercial Banks' or "online payment' in favour of IREL. In case of online payment, bidders should submit the UTR no. enabling verification of receipt of the amount.

80.3 Government Body/Public Sector Undertakings may be exempted from payment of EMD with the approval of Competent Authority.

80.4 EMD amount in rupee value is to be mentioned as a fixed amount in the tender and not as a percentage of the estimated cost and no interest is payable on the EMD.

80.5 EMD shall be exempted to MSEs and Start-ups as per prevailing guidelines in this regard.

80.6 EMD is liable to be forfeited if:

a. The tenderer changes the terms and conditions or prices or withdraw his quotation subsequent to the date of opening/ The tenderer impairs or derogates from the tender in any respect within the period of validity of the tender
b. The tenderer fails to accept the order when placed or fails to commence supplies/works/services after accepting the order.
c. In case bidder submits false/fabricated documents. d) In case bidder fails to submit SD as stipulated in the tender.

80.7 The offers received from tenderers without EMD and/or tender cost shall be summarily rejected except where an exemption is provided in the tender.

80.8 EMD may be adjusted against security deposit / performance security of the successful bidder. EMD of the unsuccessful bidders should be returned to them at the earliest after expiry of the final bid validity period and latest by the 30th day after the award of the contract. Bid security should be refunded to the successful bidder on receipt of performance security. However, in case of two stage bidding/ 2or 3 envelope bidding, EMD of unsuccessful bidders during first stage i.e. technical evaluation etc. should be returned within 30 days of declaration of result of first stage i.e. technical evaluation etc.

80.9 In case where the EMD is provided in form of BG in the prescribed format to be attached with the tender, the BG shall be obtained from a scheduled commercial Bank with validity of 45 days beyond final bid validity period.

80.10 **Traders/ distributors/ sole agent/ Works Contract are excluded from the purview of the Procurement Policy for Micro and small Enterprises, 2012 (as amended time to time).**

81.0 SECURITY DEPOSIT, PERFORMANCE BANK GUARANTEE & RETENTION MONEY

81.1 SECURITY DEPOSIT (PERFORMANCESECURITY) OR PERFORMANCE BANK GUARANTEE:

81.1.1 Security deposit (SD) shall be uniformly levied @ 5% of contract value (excluding Taxes) towards satisfactory completion of the order/works as under:

a) For works contract valued more than Rs.2 lakhs.
b) For supply & service contract valued more than Rs.5 lakhs.

Performance Security is to be furnished by a specified date (generally 14 (fourteen) days after notification of the award) and it should remain valid for a period of 60 (sixty) days beyond the date of completion of all contractual obligations of the supplier/ contractor, including warranty obligations/ defect liability period (DLP).

81.1.2 In exceptional cases waiver of SD shall be approved by Competent Authority after recording the reasons for such waiver.

81.1.3 Submission of SD/PBG, if called for in the tender can also be paid through “Insurance Surety Bonds" or “account payee demand draft" or “fixed deposit receipt from a Scheduled Commercial bank" or Bank Guarantee issued/ confirmed from any Scheduled Commercial Banks in India" or online payment to be confirmed sharing Unique Transaction Reference (UTR) to the tender inviting authority as called for in tender.

In case of GTE tenders, the performance security should be in the same currency as the contract and must conform to Uniform Rules for Demand Guarantees (URDG 758) — an international convention regulating international securities.

In case of JV, the BG towards performance security shall be provided by all the partners in proportion to their participation in the project.

81.1.4 Bank Guarantees towards Bid Security/ Security Deposit/ PBG issued by Nationalized Banks/ Scheduled Commercial Banks (other than Cooperative Banks) only acceptable.

81.1.5 Purchase Department should immediately forward the SD to finance departmentfor necessary action under intimation to EIC/ OIC.

81.1.6 In exceptional cases of work contracts, the approving authority may consider Recovering balance SD (in addition to EMD if it is given not in BG form) amount from 1st running bill of the contractor which shall be specifically mentioned in the tender document itself.

81.1.7 EMD/ Bid Security may be adjusted towards SD. However, if EMD is submitted in the form of Bank Guarantee, fresh Bank Guarantee in the prescribed formator demand draft/ bankers cheque is to be submitted towards SD.

81.1.8 BG format for security deposit and performance guarantee is attached in Annexure-XII.

81.1.9 The SD shall not bear any interest and is liable to be forfeited forunsatisfactory completion or on abandonment of the supply/ work order.

81.1.10 Additional amount of SD due to enhancement in scope of work is also to be obtained.

81.1.11 A register for the receipt, refund, forfeiture of these deposits shall be maintained by the

Purchase/Finance department.

Penalty for delayed submission of SD:
If the selected bidder/engaged agency fails to submit the Security Deposit within the stipulated period of **14 days**, a **penalty of 10% per annum** of the SD amount shall be levied for delayed remittance of Security Deposit by the vendors for non-compliance.

82.0 RETENTION MONEY:

82.1 Where in a contract, payment is made on progressive billing of work executed, 5% of the bill value shall be retained at the time of making payment towards rectification/defective work made a s retention money.

82.2 The total SD and retention money together towards performance guarantee shall not exceed 10% of the contract value.

83.0 Refund of SD and Retention money:

83.1 Before releasing SD or retention money in respect of supplies/works, a "No Due Certificate" shall be issued by EIC/OIC duly countersigned by head of the department after ensuring that no amounts are recoverable from the supplier/contractor.

83.2 EIC/OIC shall recommend release of SD and retention money after compliance by the contractor towards Guarantee/warranty/performance guarantee & other related clauses as stipulated in the purchase/work order and on submission of formal claim by contractor.

83.3 On receipt of "no dues certificate" from EIC/OIC, SD or retention money retained in the form of B.G and / or any form shall be refunded at the earliest, if the contractor is not liable to pay any money to IREL (India) Limited under any other contract.

84.0 Forfeiture of SD & Retention Money

The SD & retention money shall stand forfeited in favour of IREL (India) Limited, without any further notice to the contractor in the following circumstances:

In case of any failure whatsoever on the part of the contractor at any time during performance of his part of the contract including the extended periods of contract, where notice is given and time for rectification allowed.

If the contractor indulges at any time in any subletting/sub -contracting of any portion of the work without approval of IREL (India) Limited.

85.0 SAFETY REGULATIONS:

85.1 In respect of all labour, directly employed in the Service for the performance of Service Provider's part of this agreement, the Service Provider shall at his own expense arrange for all the safety provisions as per safety codes of acts as applicable.

85.2 The Service Provider shall observe and abide by all fire and safety regulations of the Employer. Before starting service, Service Provider shall consult with Employer's safety Engineers or EIC and must make good to the satisfaction of the Employer any loss or damage due to fire to any portion of the service done or to be done under this agreement or to any of the Employer's existing property.

85.3 The Service Provider shall ensure full and continuous compliance with the Mines Act, Mines Rules, and all DGMS Circulars. Any subsequent modifications or updates to DGMS Circulars issued after the finalization of the NIT shall also be strictly adhered to and implemented by the Contractor as they are issued from time to time.

85.4 The Service Provider shall be subject to penalties under relevant statutory acts and regulations for any failure to adhere to safety requirements.

86.0 MSME bidders are requested to get registered with TReDS Platform.

87.0 ETHICS IN TENDERING & OTHER BUSINESS DEALINGS:

Dear Sir,

IREL (India) Limited, a Government of India undertaking under the administrative control of Department of Atomic Energy is doing its business as per the rules and regulations of the Public Sector Undertaking and other statutory agencies. The business is done in an ethical, rational & impartial manner with good corporate governance.

In our endeavour to be more transparent in our dealings and to support our ideology all Vendors, Customers and Business Partners are requested not to provide any gift and / or inducement to any of our employees for securing/ being granted favour in dealings with our company. In assurance of your commitment to the aforesaid, it will be highly appreciated if you fill up, sign and abide by the attached undertakings.

Report of any gifts and / or inducements sought by any employee of the company should be immediately reported to any one of the following.

Chairman & Managing Director IREL (India) Limited. 1207, V.S. Marg, Prabhadevi, Mumbai-400 028 Ph:022-24225778 Email: cmd@irel.co.in	Chief Vigilance Officer IREL (India) Limited. 1207, V.S. Marg, Prabhadevi, Mumbai-400 028 Ph:022-24221065 Email: cvo@irel.co.in
Or Chief General Manager & Head, MK IREL (India) Limited, Manavalakurichi	

We assure you that complaints if any made by you on the subject will be kept confidential and fair investigation will be conducted and appropriate action will be taken. Similarly, we accept your commitment to thee undertaking and its violation will have consequences as per prevailing rule of the company.

Thanking you,

For IREL (India) Limited

Name_____

Designation_____

Date

88.0 UNDERTAKING:

Date:

To,
M/s. IREL (India) Limited.,
1207, V.S. Marg, Prabhadevi
Mumbai 400 028.

I / We ..... am / are a Vendor / Customer of IREL (India) Limited (now onwards to be referred as Company).

I / We agree and undertake:

Not to provide any gift and / or inducement to any employee of the Company in connection with securing / being granted favour (s) in my / our dealings with the corporate office of the company and / or its any field units namely MK, Chavara, OSCOM, RED & IRERC.

To immediately report any gift and / or inducement sought by any employee of the Company granting favour(s) to me / us in my / our dealings with the Company and / or its field units.

Signature……..

Name……..

Title……..

Name of the Company and Address (with Seal)……..

88.0 DECLARATION BY CONTRACTOR / SERVICE PROVIDER

I/We have read, understood, and agree to be bound by all the statutory compliance conditions set out above and undertake to comply fully with the same during the subsistence of the contract.

Name of Contractor / Service Provider: _____

Authorised Signatory: _____

Date: _____

Seal / Stamp: _____

Annexure- I

DECLARATION – NON-BLACKLISTING

(To be submitted by an Authorized Signatory on the company's original letter head with signature and seal)

To,

CM -Technical (Purchase & Stores)
IREL (India) Limited
Manavalakurichi PO.,
Kanyakumari District,
Tamil Nadu – 629 252.

Sir,

In response to the Bid Ref No.: _____ dated _____ 2026, I/We hereby declare that presently our agency has not been declared ineligible or black listed for corrupt & fraudulent practices either indefinitely or for a particular period of time by any State Govt./ Central Govt./PSU/Government of India Society on the date of bid submission.

If this declaration is found to be incorrect then without prejudice to any other action that may be taken, my/ our bid if any, to the extent accepted may be cancelled.

Thanking you,

Yours faithfully,

Name of the agency: -
Authorized Signatory: -
Seal of the Organization: -

Date:
Place:

Annexure II

Tender Acceptance Letter (Format)

(To be given on Company Letter Head)

Date:

To,

CM -Technical (Purchase & Stores)
IREL (India) Limited
Manavalakurichi PO.,
Kanyakumari District,
Tamil Nadu – 629 252.

Sub: Acceptance of Terms & Conditions of Tender.

Tender Reference No: _____

Name of Tender/Work: -

Dear Sir,

1. I/ We have downloaded / obtained the tender document(s) for the above mentioned 'Tender/Work' from the website(s) namely: https://etenders.gov.in/eprocure/app as per your advertisement, given in the above mentioned website(s).

2. I / We hereby certify that I / we have read the entire terms and conditions of the tender documents from Page No._____to____(including all documents like annexure(s), schedule(s), drawings etc.,), which form part of the contract agreement and I / we shall abide hereby by the terms / conditions / clauses contained therein.

3. The corrigendum(s) issued from time to time by your department/ organization too has also been taken in to consideration, while submitting this acceptance letter.

4. I / We hereby unconditionally accept the tender conditions of above mentioned tender document(s) /corrigendum(s) in its totality/ entirety.

5. I/We do hereby declare that our Firm has not been blacklisted / debarred by any Govt. Department/Public sector undertaking.

6. I / We certify that all information furnished by the our Firm is true & correct and in the event that the information is found to be incorrect/untrue or found violated, then your department/ organisation shall without giving any notice or reason therefore or summarily reject the bid or terminate the contract, without prejudice to any other rights or remedy including the forfeiture of the full said earnest money deposit absolutely, if any.

Yours Faithfully,

(Signature of the Bidder, with Official Seal)

Annexure III

FORMAT FOR CERTIFICATE FROM PRACTICING CHARTERED ACCOUNTANT FOR ELIGIBLE WORKS

Certificate from the practicing chartered accountant

Based on its books of accounts and other published information authenticated by it, this is to certify that …….. (Name of the Bidder) was engaged by ……. (title of company) for ……. (Name of work)

The total fees received by the Bidder for the work is …….

We further certify that the said work was completed on ……. (date).

Name of the audit firm:

Seal of the audit firm:

Date:

License/registration no:

UDIN NO.

(Signature, name, designation of the authorized signatory of the audit firm)

Signature of Authorised Signatory with seal

Particulars of the bidder

Sl.	Particulars	Details
1.	a) Name of Bidder b) Legal status (e.g. incorporated private company, unincorporated business, partnership etc.): c) Date of incorporation and/ or commencement of business d) Brief details about main line of business.	
2.	Bank details:- The payments to be released from IREL will be made through e-payments. The contractor has to provide the following details: • Beneficiary name: • Account Number: • Name of the bank: • IFSC: • Nature of Account (Savings/Current/CC/OD): Branch Code	
3.	Particulars of individual(s) who will serve as the point of contact/ communication for the Bidder a) Name b) Designation c) Company d) Address e) Telephone Number f) Email address	
4.	Particulars of the Authorized Signatory of the Bidder a) Name b) Designation c) Company d) Address e) Telephone Number f) Email address	
5.	GST and PAN no details:	

Annexure V

Requirement details of tender documents

Note: The complete bid document submitted by the bidder as technical bid (Part 1) shall be duly numbered in each page. Based on the numbering done, the following table should be filled up by the bidder.

Sl.	Required Documents	(bidder should correctly fill the following column)	(Indicate page number of the bid document where related information is shown /available, so that it can be verified by IREL)
1.0	Complete documents as per the Pre-qualification criteria a. WO and completion certificate b. Financial capability c. A self-certified letter that the bidder has not been blacklisted d. Letter of Authorization from respective OEMs		
2.0	Data sheet of the technical specification		
3.0	Particulars of the bidder		
4.0	Ethics and Undertaking of GCOC		
5.0	Annexures (I, II, III, IV, V, VI, VII & VIII)		

ANNEXURE VI

EMD Declaration

I have furnished a sum of ₹1,22,025/- (Rupees One lakh twenty two thousand and twenty five only) towards EMD vide NEFT/RTGS/BG No……. Dated……

Place:

Signature of tenderer:

Full Address:

IREL Bank Details

Name of Bank	State Bank of India, Manavalakurichi
Account Type	Current Account
Account Number	**57052533526**
IFSC Code	**SBIN0070333**
MICR Code	**629009009**

Details of payment to be uploaded as attachment during tender submission and the same shall be e-mailed to: purchase-mk@irel.co.in

Email should contain the following details

1) Name of the Company.
2) Your E-mail ID and Contact Details including full postal Address.
3) EMD & TDC Amount.
4) Transaction ID with details of bank and branch.

Self-Certificate under preference to Make in India order Certificate

In line with Government Public Procurement Order No. P-45021/2/2017-PP (BE-II) dated 04.06.2020 issued by Ministry of Commerce and Industry and subsequent amendment of the order dt. 16th September 2020, we hereby certify that we, M/s……, are local supplier meeting the requirement of minimum local content (i.e amount of value addition) ……. As defined in above orders for the item/s against Enquiry/Tender No…….Details of location at which local value addition is made for the item/s are as follows:

We also understand, false declarations will be in breach of the code of integrity under rule 175(1)(i)(h) of the General Financial Rules for which a bidder or its successors can be debarred for upto two years as per Rule 151(ii) of the General Financial Rules along with such other actions as may be permissible under law.

(Signature of the Bidder, with Official Seal)

Annexure to Bid Form: Eligibility Declarations

Tender Document No.

Tender Title:

Bidder's Name:

Bidder's Reference No. Date:

Restrictions on procurement from Bidders from a country or countries, or a class of countries under Rule 144 (xi) of the General financial Rules 2017.

"I/We have read the clause regarding restrictions on procurement from a bidder of a country which shares a land border with India: and solemnly certify that we are not from such a country or, if from such a country, has been registered with the Competent Authority. I hereby certify that this bidder fulfils all requirements in this regard and is eligible to be considered.

Penalties for false or misleading declarations:

We hereby confirm that the particulars given above are factually correct and nothing is concealed and also undertake to advise any future changes to the above details. We understood that any wrong or misleading self-declaration by us would be violation of Code of integrity and would attract penalties as mentioned in this tender document, including debarment.

(Signature of the Bidder, with Official Seal)

Annexure –IX

Price Bid Format
(to be submitted online)

Sl. No.	Description of work	Unit	Qty	Rate per unit in ₹	Total Value in ₹
1	**Dismantling and removal of R.R.** masonry/brick masonry/ plain cement concrete work, etc. height upto 4.5m and dumping the debris within a lead of 500m by means of manually/mechanically, etc. complete as per specification and as directed by the Engineer-in-charge.	Cum	1.00		
2	**Dismantling and removal of RCC foundation**/ column/ slab/beam, etc. in all heights upto 4.5m including all necessary scaffolding and dumping the debris within a lead of 500m by means of manually / mechanically, etc., complete as per specification and as directed by the Engineer-in-charge.	Cum	1.00		
3	**Earthwork excavation** for foundation in all types of loose/hard soil and depositing the spoils with an initial lead of 20m and lift upto 2m including refilling etc. by means of manually/ mechanically complete as per specification and as directed by the Engineer-in-charge.	Cum	67.00		
4	**Supplying and filling of gravel** of approved quality above the earth surface with watering, levelling works, compaction and consolidating, including necessary anti-termite treatment, etc. by means of manually/ mechanically complete as per specification and as directed by the Engineer-in-charge.	Cum	111.00		
5	**Supplying, providing and laying soling stone 230mm thick** over the existing sub base/sub grade including levelling and consolidation to form a compact surface using hard blue granite soling stone with hand packing, wedging them tightly and filling the voids with loose sand, watering and sweeping the sand into the joints so that the hole is formed as solid mass, etc. complete as per standard specification and as per the direction of Engineer-in-charge.	Sqm	0.50		
6	**Supplying, providing and laying PCC 1:4:8 mix** for foundation/ flooring work using 40mm and below grade hard blue granite jelly including all form works, mixing, laying, compaction, consolidation and curing, etc. complete as per standard specifications and as directed by the Engineer-in-charge.	Cum	5.00		
7	**Supplying, providing and laying PCC 1:2:4 mix** for foundation/ flooring work /kerb wall drainage wall using 20mm and below grade hard blue granite jelly including all form works, mixing, laying consolidation and curing, etc. complete as per standard specifications and as directed by the Engineer-in-charge.	Cum	113.50		
8	**Supplying, providing & laying RR masonry** foundation/ wall/ retaining wall in cement mortar 1:6 for construction of wall using hard blue granite stone, etc. complete from 2.5 m below ground level to 4.5m height above ground level with neat finishing including proper pointing & necessary scaffolding work etc. complete as per standard specifications and as directed by the Engineer-in-charge.	Cum	14.00		
9	**Supplying, providing and laying brick masonry in CM 1:6** using well burnt country brick of minimum size 22.9x11.2x7cm for foundation /kerb wall/wall upto 4.5m height from ground level including all scaffolding, staging, curing, etc. complete complying with standard specifications and as directed by the Engineer-in-charge.	Cum	13.00		
10	**Supplying, providing and laying pre-cast concrete kerb stone** of minimum size 450x150x300mm laid along the edges of floor / kerbwall /pavements upto 4.5m height from ground level including necessary grouting of joint, all scaffolding, staging, curing, etc. complete complying with standard specifications and as directed by the Engineer-in-charge.	m	243.00		
11	**Supplying, providing and fixing twisted reinforcement IS 1786**	Kg.	90.00		

	HYSD bars Fe500D/Fe550D (TMT bars - TATA/ Agni/ JSW) including fabrication, cutting, bending, cold tying, with overlapping to the standard length wherever necessary and placing the reinforcement in position as per the direction of Engineer-in-charge including binding, provision of spacer bars, cover blocks and all other incidental charges, necessary scaffolding, staging, safety arrangements, etc. complete for all RCC works (item No. 12) upto 4.5m height as per standard specification and as per the direction of Engineer-in-charge.				
12	**Supplying, providing and laying cement concrete 1:1.5:3 for RCC works** height upto 4.5m using 20mm and below grade hard blue granite jelly with specified reinforcement (rate excluding the cost of reinforcement) and all mixing, laying, compaction, leveling, consolidation and curing, etc., including the cost of centering / shuttering work, necessary scaffolding, staging, safety arrangements, etc. complete as per the specification and as per the direction of Engineer-in-charge.	Cum	1.50		
13	**Supplying, plastering with CM 1:4 mix** 15mm thick one coat floated hard & trowelled smooth etc for floors & walls upto 4.5m height with neat finishing and necessary grouting, scaffolding, staging, safety arrangements, etc. and mix with water proofing compound (Sika /Perma), fibre mesh wherever required, etc. complete complying with standard specifications and as directed by the Engineer-in-charge.	Sqm	159.00		
14	**Supplying, plastering with CM 1:3 mix** 12mm thick one coat floated hard & trowelled smooth for RCC beam, column, ceiling, wall & floor upto 4.5m height with neat finishing and necessary grouting including all scaffolding, fibremesh wherever required, etc. complete complying with standard specifications and as directed by the Engineer-in-charge.	Sqm	171.00		
15	**Supplying, fabricating and fixing of required size ISI standard [YST 310 grade] heavy type GI round / square/ rectangular pipe** (Jindal /Kalinga) at all heights for roof truss, side cladding, shed, gate & partition, etc. including cutting, welding, grinding with necessary MS foundation bolt of size M16 Dia and 500 mm depth for placing with encasing/pocket hole with required template & 12mm thick base plate at bottom (foundation) and top 10mm thick base plate (joint area of GI pipe and roof truss) including proper binding/welding, grouting of foundation bolts with neat finishing etc. and painting the pipe with two coat with 1st quality epoxy smoke grey paint of approved shade (Asian / Berger/Nippon) over a coat of epoxy zinc-chromate/ zinc-phosphate primer (Asian/ Berger/ Nippon), including necessary scaffolding, safety arrangements, etc. complete as per specification and as per the direction of Engineer-in-charge.	Kg.	17304.00		
16	**Supplying, providing and fixing of roof sheet with 0.47mm thick powder coated shee**t/ powder coated end curved / plain sheet [TATA - Durashine/JSW colouron+ (blue/red/grey)] at all heights with riveted joint/necessary fixing arrangements to suit the existing M.S. angle / channel, purlin, GI pipes, etc. including necessary ridges, UPVC rain water gutter around the shed, scaffolding, safety arrangements with all conveyance charges, loading/ unloading charges, etc. complete as per standard specification and as directed by Engineer-in-charge. (Minimum required overlapping is 15cm).	Sqm	200.00		
17	**Supplying, fabricating and fixing of required size ISI standard GI TATA Structura pipes** Square/ Rectangular/ Circular of thickness 2mm-10mm for roof, side cladding, shed, upto 15m height etc. including cutting, welding, grinding, bolt arrangements with neat finishing and necessary scaffolding, safety arrangements, etc. complete as per specification and as per the direction of Engineer-in-charge. (YST 310 grade- Square & Rectangular: IS: 4923 & Circular: IS: 1161/ IS3601).	Kg.	1.00		
18	**Supplying, providing and fixing of roof sheet with 2.8mm to 3.00mm thick UPVC** corrugated/ trafford/ trapezoidal roof sheet	Sqm	1570.00		

	(Loyid /Tetto Colour/Sun-Arch/Sky Tech) Colour (blue / green / white / red/grey) at all heights with UPVC self-drilling screws with end cap are heavy-duty fasteners (2 nos. per m) to suit the existing M.S. angle /channel, purlin, GI pipes (for fixing bolt hole to be made with drilling machine only), including fixing the screw top covering with grease and end cap with necessary UPVC roof ridges including UPVC rain water gutter around the shed with necessary fitting, etc. and scaffolding, safety arrangements with all conveyance charges, loading/ unloading charges, etc. complete as per standard specification and as directed by Engineer-in-charge. (Minimum required overlapping is 15cm).				
19	**Supply of paints and painting two coat with emulsion paint** (Asian / Berger/Nippon) of approved shade for the surface of the buildings over a coat of wall primer (Asian, Berger, Nippon) upto 15m height from ground level, including thorough scrapping, cleaning, removal of dirt of existing surface, all tools & tackles, sandpaper and scaffolding arrangements, and applying crack filler/wall putty touch-up works wherever required etc. complete as per specification and as directed by the Engineer-in-charge.	Sqm	146.00		
20	**Supply of paints and painting two coat with 1st quality enamel / touch wood paint** of approved shade (Asian/ Berger/ Nippon) matching to the existing for all doors, windows, false ceiling, pipes etc. over a coat of wood sealer/primer and putty wherever required including thorough cleaning and removal of dirt and necessary scaffolding arrangements, upto 15m heights, etc. complete as per specification and as directed by the Engineer-in-charge.	Sqm	5.00		
21	**Supplying and fixing of 6kg PVC collecting pipe** (110mm dia) (Finolex /Ashirvad) at the end of rainwater collecting bowl with suitable powder coated clamps (2-5mm thick) and necessary fittings elbow, bend, coupling, solvent cement, scaffolding arrangements, etc. complete as per the direction of Engineer-in-charge.	m	220.00		
22	**Supplying, providing and laying with 9mm thick vitrified-Marbonite double charge**/matte finish tiles of size 1200mmx 600mm (Kajaria/ Somania /Qutone brand) with Cement Mortar 1:2 and pointing, (apply spacer joint, epoxy joint-wherever required) including finishing the joint and pointing flush with the surface, etc. complete as per specification and as directed by Engineer-in-charge.	Sqm	56.00		
23	**Supplying, providing and finishing the floor with 9mm thick Anti-skid ceramic tiles** (Somania/ Kajaria/ Qutone make) of size 300mm x 300mm of approved quality and shade in CM 1:3 thick and pointing the tiles with matching colour cement, etc. complete as per the direction of the Engineer-in-charge.	Sqm	6.00		
24	**Supplying, providing and fixing 50/60mm thick coloured (red / yellow/black/Grey)** square /Zig-zag/ Hexagon/ Rectangle shape concrete paver block of size 200x100mm/ 150x300mm/ 250x100mm/ 200x120mm/ 220x270mm/ 200x200mm pattern floor, bottom laying with 6mm jelly of 50mm thick over the earth surface including levelling the earth surface with neat finishing, side packing etc. complete as per the specification and as per the direction of the Engineer-in-charge.	Sqm	926.00		
25	**Supplying, providing, laying and fixing of Stainless Steel hand rails** for staircase using square/circular of size 50mm 304L Grade Stainless Steel pipe (top & vertical pillar) of 1.4mm thick will be provided with tubular supports made of 304L Grade Stainless Steel pipe of 25mm dia of 1.4mm thick welded to the railing (3 rows c/c & vertical supports with necessary space) and the supports will be grouted into the surface area with 93.00mm thick Stainless Steel circular base plate of 304 Grade. The rate shall included for grouting into concrete with necessary supporting arrangements the hand rail in floor polishing buffing, bonding, cutting, grinding, conveyance, welding charges, etc. complete as per the standard specifications and as per the direction of	Feet	23.00		

	Engineer-in-charge.				
26	**Supplying, providing, laying and fixing electrification concealed** (polythene pipe)/open point with required wire (make: Finolex/ Havells / Polycab), switch box (metal box-Legrand) switches (Make: Hi-fi) & 16Ams socket with all required necessary fittings including chipping, routing, clamping and all other incidental charges, etc. complete as per the specification and as per the direction of Engineer-in-charge.	Point	48.00		
27	**Supplying, providing and fixing of Led tube light 22W** (Havels/ Wipro Garnet) with all required necessary fittings etc. complete as per the specification and as per the direction of Engineer-in-charge.	No.	48.00		
28	**Engagement of Artist** for artistic work in the furniture/ gates/ name board/building wall, etc. including scrapping & cleaning the surface and marking, etc. complete as directed by the Engineer-in-charge.	No	16.00		
29	**Engagement of Fitter** for miscellaneous works complete as directed by the Engineer-in-charge.	No.	8.00		
30	**Engagement of Mason** for miscellaneous works complete as directed by the Engineer-in-charge.	No.	8.00		
31	**Engagement of labour (Mazdoor)** for miscellaneous work complete as directed by the Engineer-in-charge.	No.	10.00		

Annexure – X

CONTRACTOR ENROLMENT/ REGISTRATION FORM

1. NAME :

2. ADDRESS :

3. E-MAIL/ MOBILE :

4. WORK ORDER DETAILS :

Sl. No	Work Order No. & Date	Work Order Validity		Nature of Work	Dept.	EIC/ OIC Name
		From	To			

5. P.F. CODE NO :
6. INSURANCE DETAILS :

ESI No.	Name of Insurance Company	Policy No.	Valid	Type of Policy	No. of persons covered

7. LABOUR LICENSE DETAILS:

Labour License No.	Address of Licensing Office	License Issuance Authority	Date of Expiry	Maximum No. of Labourers as per License

SIGNATURE OF CONTRACTOR

Annexure - XI

PROFORMA FOR BANK GUARANTEE FOR EARNEST MONEY DEPOSIT

In accordance with Notice Inviting Tender (NIT) No._____ Dated _____ for the work of _____ (herein after referred to as "the said Works") for Rs._____ (Rupees_____ only), under _____ (MK unit/Chavara unit/OSCOM unit/RED unit/Corporate Office) of M/s IREL (India) Limited, a company incorporated under Indian Companies Act, having its registered office at Plot No.1207, ECIL building, Opp. to Siddhivinayak Temple, Veer Savarkar Marg, Prabhadevi, Mumbai – 400028, India (herein after referred to as IREL), M/s _____ Address _____ [Herein after referred to as Contractor (s)] wish /wishes to participate in the said tender and a Bank Guarantee for the sum of Rs._____ (in words) valid for a period of _____ days (in words) is required to be submitted by the Bidder towards the Bid Security.

We the _____Bank (hereinafter called the said Bank) do hereby undertake to pay to IREL, the sum of Rs. _____ (Rupees_____ only) by reason of the said tenderer's failure to enter into an agreement of contract on intimation of acceptance of his tender and/or to commence the contract works and/or failure to deposit the security deposit within the stipulated period as per the terms and conditions relating to and/or governing the contract and/or specified in the Notice Inviting Tender (NIT). We also agree that any such demand made on the Bank shall be conclusive as regards the amount due and payable by the Bank under this Guarantee. We also agree that notwithstanding any dispute or difference or any litigation in respect of or arising from the said contract and/or the acceptance of the tender of the tenderer afore stated by IREL including the question as to the tenability of the claim of the IREL for forfeiting the Earnest Money being the Bank Guarantee herein, we shall forthwith pay the said amount to IREL on demand being made as aforesaid.

We _____ Bank further agree that the guarantee herein contained shall remain in full force and effect during the period that would be taken for entering into an Agreement of contract and that it shall continue to be enforceable till all the dues of the IREL under the terms and conditions of the NIT for the work have been fully paid and its claims satisfied or discharged or till IREL certifies, that the terms and conditions of the NIT have been fully and properly carried out by the said tenderer and accordingly discharges the guarantee.

We _____ Bank further agree with the IREL that the IREL shall have the fullest liberty without our consent and without affecting in any manner our obligations hereunder to vary any of the terms and conditions of the NIT and/or terms and conditions governing the contract or to extend the time of validity of the offer from the said tenderer from time to time or to postpone for any time or from time to time

any of the powers exercisable by the IREL against the said tenderer and to forbear or enforce any of the terms and conditions of the NIT and we shall not be relieved from our liability hereunder by reason of any such variation, or extension being granted to the said tenderer or for any forbearance, act or omission on the part of the IREL or any indulgence by the IREL to the said tenderer or by any such matter or thing whatsoever which under the law relating to surety/guarantee would but for this provision have effect of so relieving us.

We _____Bank do hereby further agree that any change in the Constitution of the said tenderer or the Bank will not affect the validity of this guarantee.

We _____ Bank lastly undertake not to revoke this guarantee during its currency except with the previous consent of the IREL in writing.

Notwithstanding anything to the contrary contained herein before:

(i) Our Liability under this Bank Guarantee shall not exceed and restricted to Rs

…… (in words)

(ii) This Bank Guarantee shall be valid upto ……, unless extended on demand.

(iii) The bank is liable to pay the guaranteed amount or any part thereof under this bank Guarantee only if IREL serve a written claim or demand on or before

…… (Three months from the expiry of Guarantee period)

Dated the _____ day of _____ 2026

_____Bank

(Signature with name in Block letters with designation,

Attorney as per power of Attorney No._____ dt. _____)

Bank's Common seal

Annexure – XII

PROFORMA FOR BANK GUARANTEE FOR SECURITY DEPOSIT

WHEREAS on or about the _____ day of _____M/s _____ (Tenderer's name & address), having its registered office situated at _____(Postal address) (herein after referred to as 'The Tenderer') entered into a contract bearing reference no. _____ dtd. _____ with _____ (MK unit/Chavara unit/OSCOM unit/ RED unit/Corporate Office) of M/s IREL (India) Limited, a company incorporated under Indian Companies Act having its registered office at Plot No.1207, ECIL building, Opp. to Siddhivinayak Temple, Veer Savarkar Marg, Prabhadevi, Mumbai – 400 028, India (herein after referred to as IREL), for _____ (details of order) (herein after referred to as 'The Contract').

AND WHEREAS under the terms and conditions of the contract the tenderer is required to keep with IREL a security deposit of Rs. _____ (Rupees_____ only) or submit a Bank Guarantee in lieu of cash deposit for the fulfillment of the terms and conditions of the contract, and whereas the supplier has chosen to submit a Bank Guarantee.

We _____ Bank do hereby undertake to pay the amounts due and payable under this Guarantee without any demur, merely on a demand from IREL stating that the amount claimed is due by way of loss or damage caused to or that would be caused to or suffered by IREL by reason of breach of any of the terms and conditions of the said contract. Any such demand made on the bank shall be conclusive as regards the amount due and payable by the Bank under this Guarantee. The payment will be released within three working days from the date of demand for payment.

We undertake to pay to IREL any money so demanded notwithstanding any dispute or disputes raised by the tenderer in any suit or proceeding pending before any court or tribunal relating thereto, our liability under these present being absolute and unequivocal.

The payment so made by us under these guarantees shall be valid discharge of our liability for payment there under and the tenderer shall have no claim against us for making such payment.

We _____Bank further agree that the Guarantee herein contained shall remain in full force and effect during the period that would be taken for the performance of the said Agreement and that it shall continue to be enforceable till all the dues of IREL under or by virtue of the said Agreement have been fully paid and its claims satisfied or discharged or till IREL certifies that the terms and conditions of the said Agreement have been fully and properly carried out by the said tenderer and accordingly discharges this Guarantee. Our Guarantee shall remain in force until _____ and unless a demand or claim under this guarantee is made on us in writing within three months from the expiry of the Guarantee period, we shall be discharged from all liability under this Guarantee thereafter.

We _____ Bank, further agree that IREL shall have the fullest liberty without our consent and without affecting in any manner our obligations hereunder to vary any of the terms and conditions of the said Agreement or to extent time of performance by the said tenderer from time to time or to postpone for any time or from time to time any of the powers exercisable by IREL against the said tenderer and to forbear or enforce any of the terms and conditions relating to the said Agreement and we shall not be relived from our liability by reason of any such variation, or extension being granted to the said contract or for any forbearance, act or omission on the part of IREL or any indulgence by IREL to the said tenderer or by any such matter or thing whatsoever which under the law relating to sureties would but for this provision, have effect of so relieving us.

This guarantee will not be discharged due to the change in the constitution of the Bank or the Consultant.

We_____ Bank lastly undertakes not to revoke this guarantee during its currency except with the previous consent of IREL in writing.

Notwithstanding anything to the contrary contained herein before:

(i) Our Liability under this Bank Guarantee shall not exceed and restricted to Rs …… (in words)

(ii) This Bank Guarantee shall be valid upto ……, unless extended on demand.

(iii) The bank is liable to pay the guaranteed amount or any part thereof under this bank Guarantee only if IREL serve a written claim or demand on or before …… (Three months from the expiry of Guarantee period)

Dated the _____ day of _____ 2026

_____Bank (Signature with name in Block letters with designation,

Attorney as per power of Attorney No._____ dt. _____)

Bank's Common seal

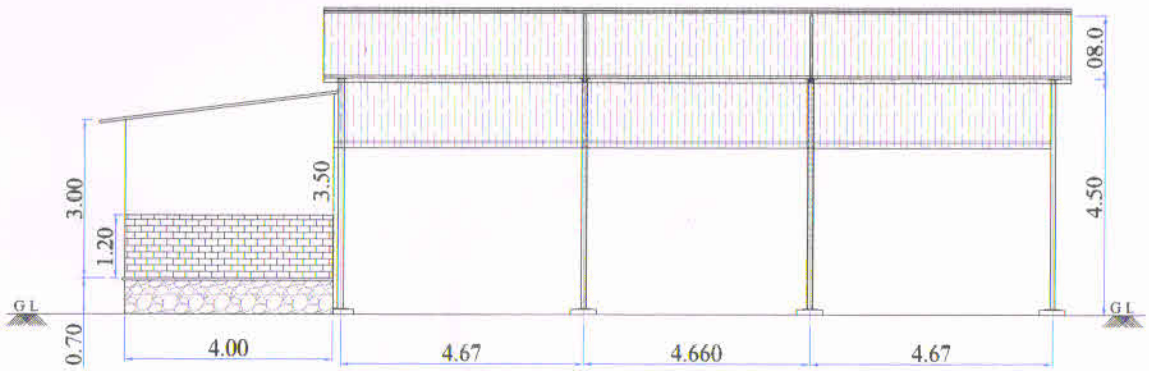

ELEVATION

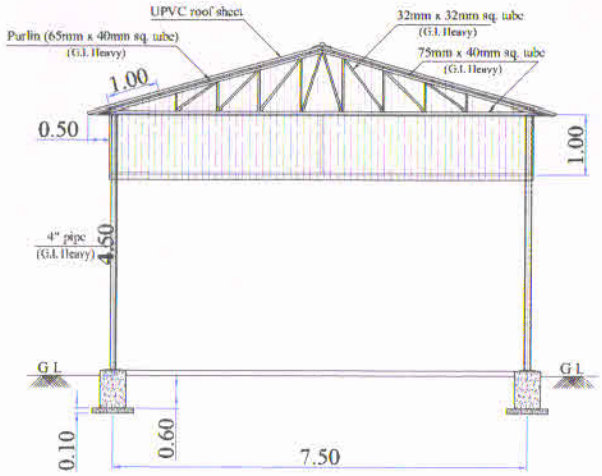

SECTIONAL SIDE VIEW

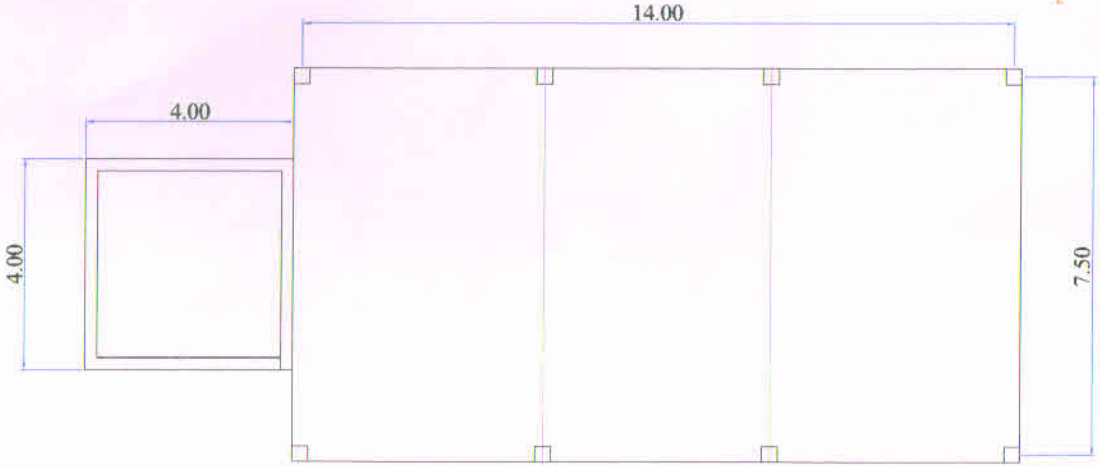

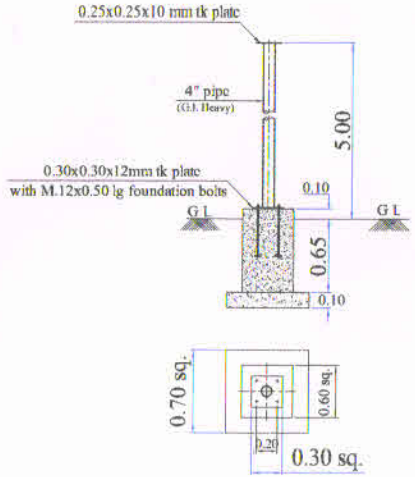

FOUNDATION DETAILS

All dimensions are in Meter

आईआरईएल (इंडिया) लिमिटेड मणवालकुरिचि IREL (India) Limited MANAVALAKURICHI			NAME	SIGNATURE
TITLE Construction of Community Hall in Arulmigu Sree Tharma Sastha Thirukoil Kunnancadu, Azhaganparai		APPROVED	S.P. GANESHAN C M (CIVIL)	
		CHECKED	R. SARATH KUMAR MANAGER (CIVIL)	
		DRAWN	T. MURALIDHARAN	
SCALE NTS		DRAWING NUMBER MK/CIVIL/107/30.06.2026		

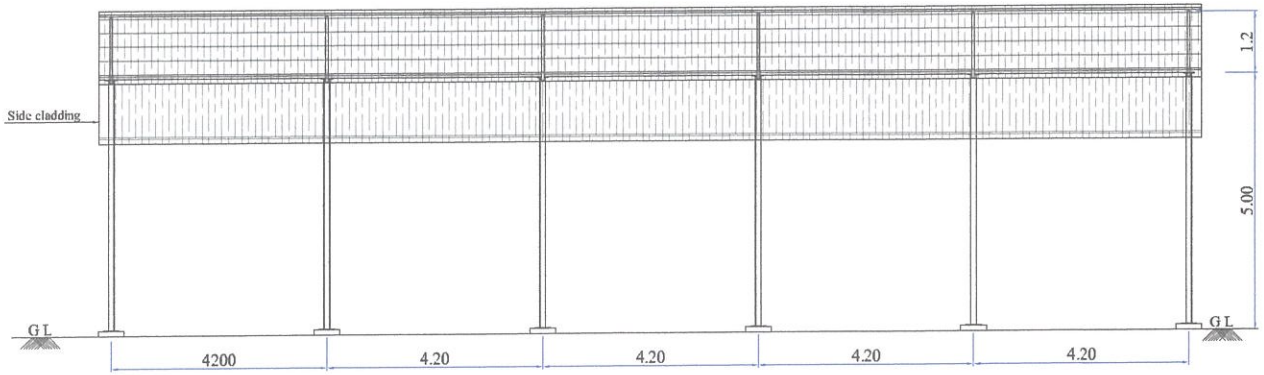

ELEVATION

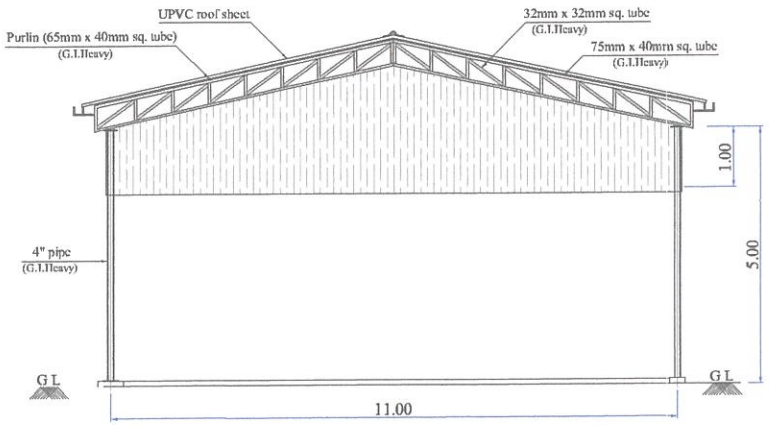

SIDE VIEW

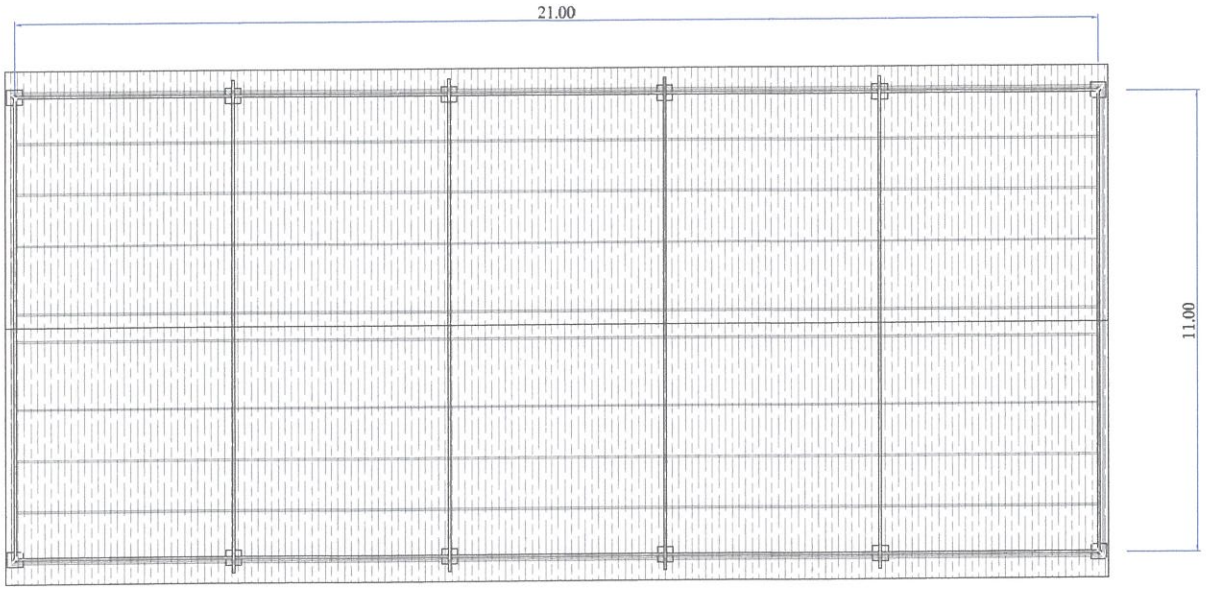

PLAN

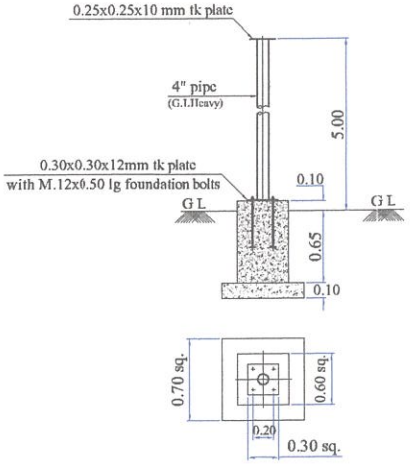

FOUNDATION DETAILS

All dimensions are in Meter, unless otherwise specified

			NAME	SIGNATURE
आईआरईएल (ईंडिया) लिमिटेड मणवालकुरिचि IREL (India) Limited MANAVALAKURICHI		APPROVED	S.P. GANESHAN C M (CIVIL)	
TITLE Construction of Community Hall in Arulmigu Mondaikadu Amman Temple, Mondaikadu		CHECKED	R. SARATH KUMAR MANAGER (CIVIL)	
		DRAWN	T. MURALIDHARAN	
SCALE NTS		DRAWING NUMBER MK/CIVIL/101/27.06.2026		

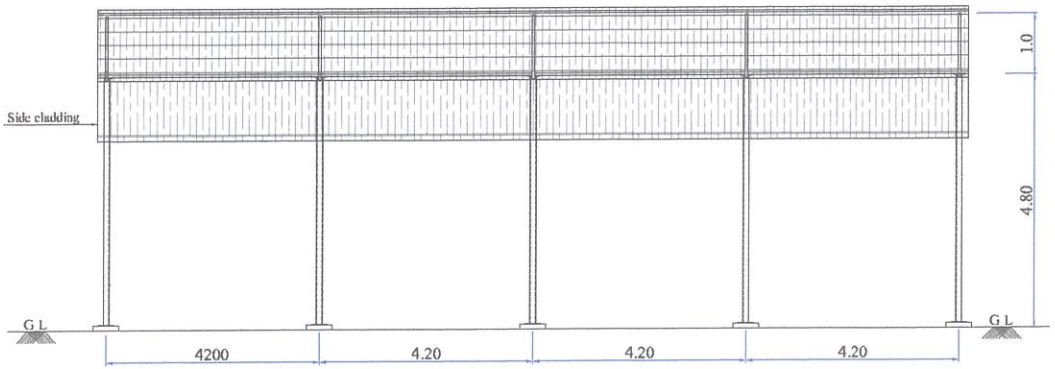

ELEVATION

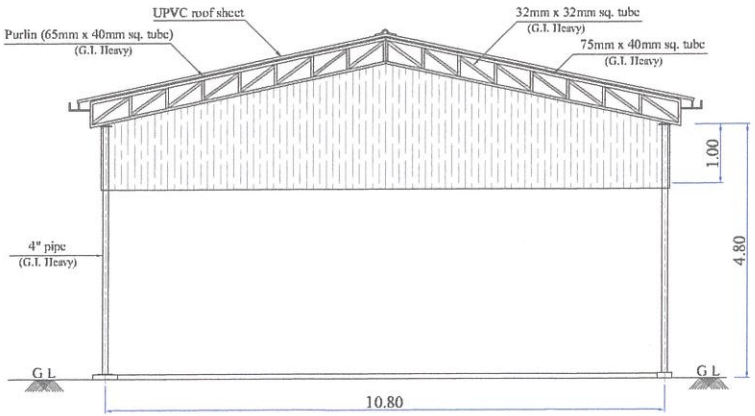

SIDE VIEW

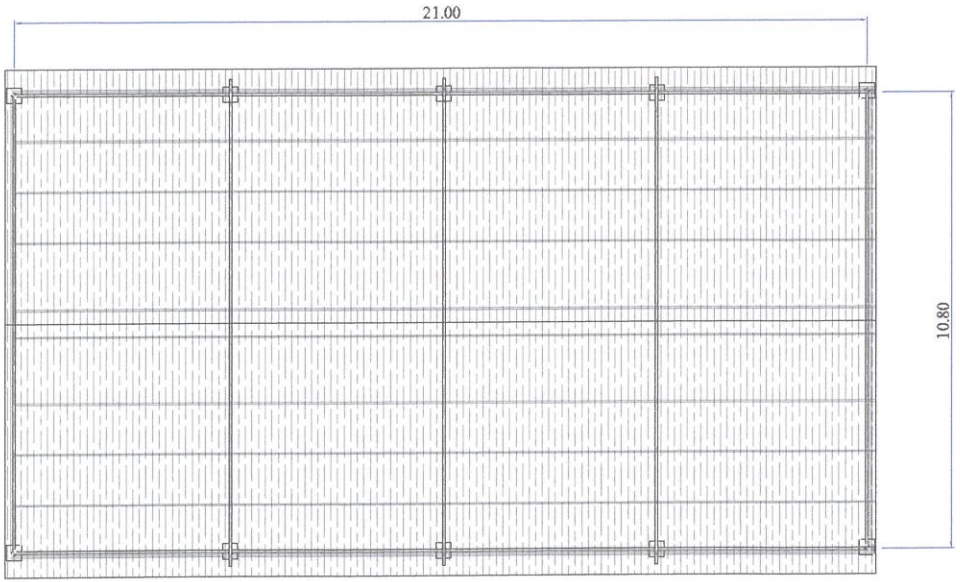

PLAN

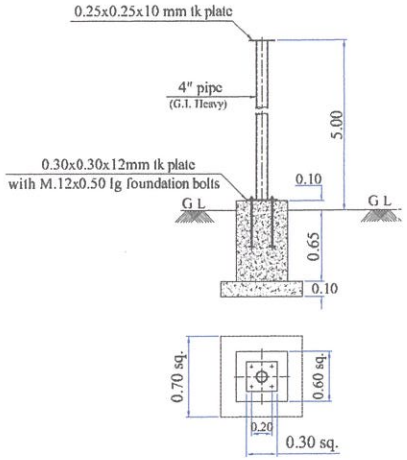

FOUNDATION DETAILS

All dimensions are in Meter, unless otherwise speciffied

आईआरईएल (इंडिया) लिमिटेड मणवालकुरिची IREL (India) Limited MANAVALAKURICHI		NAME	SIGNATURE
TITLE: Construction of Community Hall in Sree Attumadan Thampuran Koil Kalladivilai, Kadiapattinam	APPROVED	S.P. GANESHAN C M (CIVIL)	
	CHECKED	R. SARATHI MANAGER (CIVIL)	
	DRAWN	T. MURALIDHARAN	
SCALE NTS	DRAWING NUMBER MK/CIVIL/102/27.06.2026		

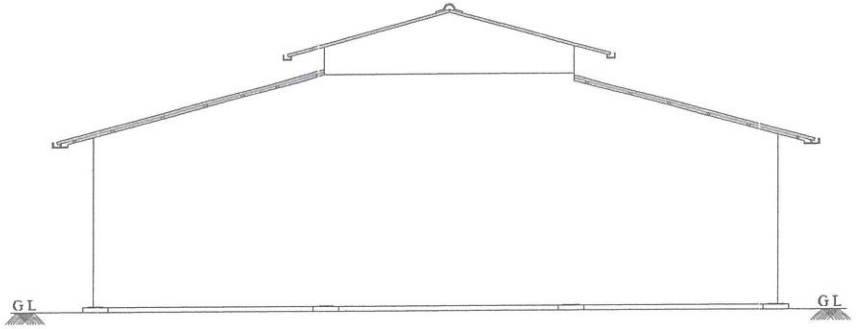

ELEVATION

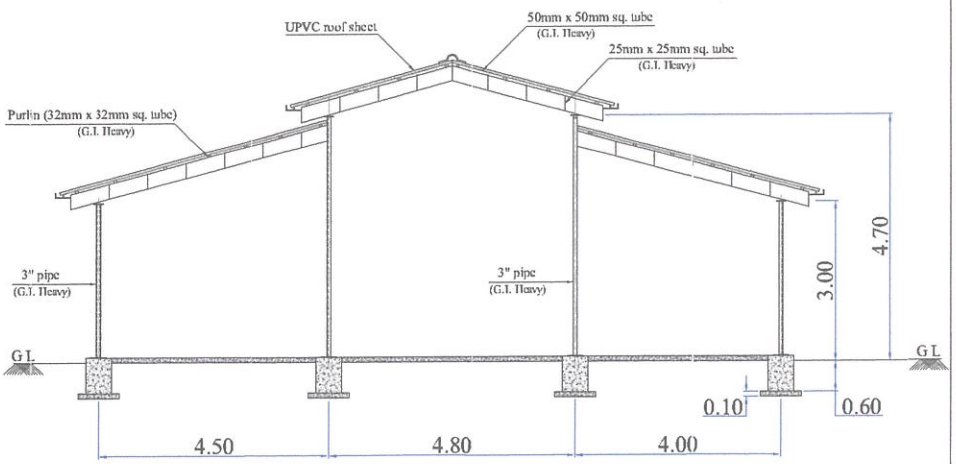

SECTIONAL VIEW

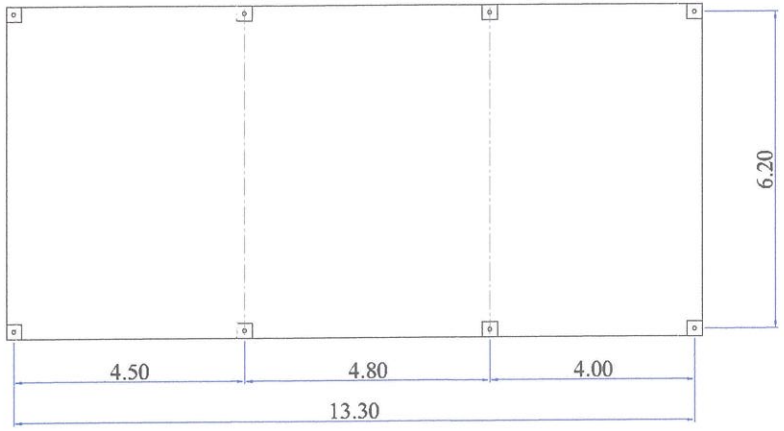

PLAN

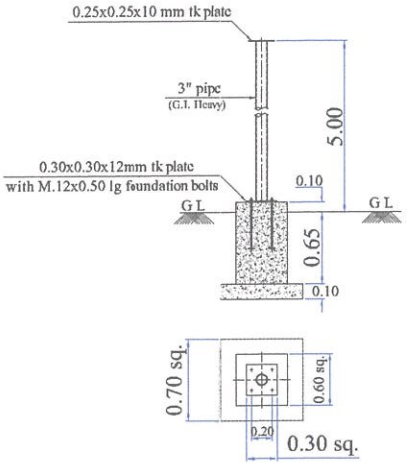

FOUNDATION DETAILS

All dimensions are in Meter

		NAME	SIGNATURE
ईआरईएल (इंडिया) लिमिटेड मणवालकुरिची IREL (India) Limited MANAVALAKURICHI	APPROVED	S.P. GANESHAN C M (CIVIL)	
TITLE Construction of Community Hall in Sree Ram Kovil Committee Midalam, Udayamarthandam	CHECKED	R. SARATH KUMAR MANAGER (CIVIL)	
	DRAWN	T. MURALIDHARAN	
SCALE N T S		DRAWING NUMBER MK/CIVIL/103/30.06.2026	

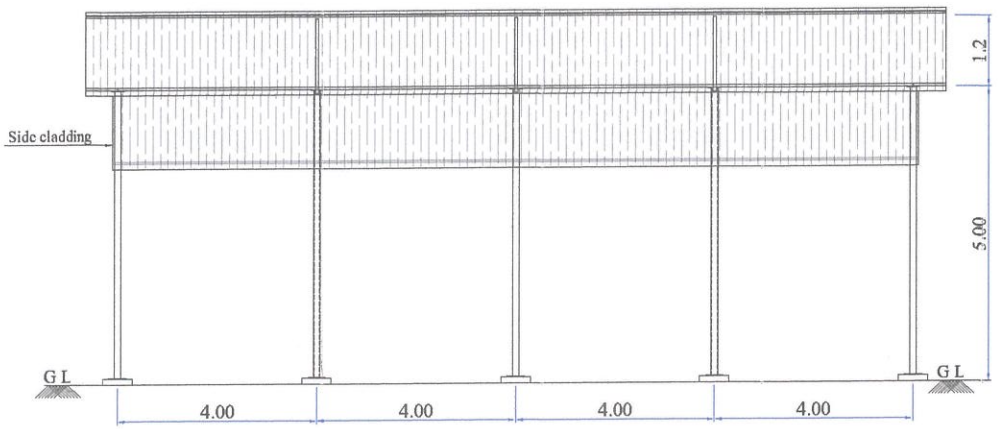

ELEVATION

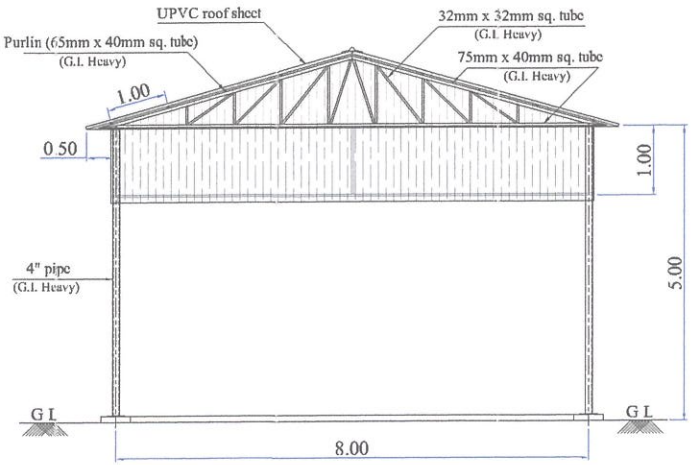

SIDE VIEW

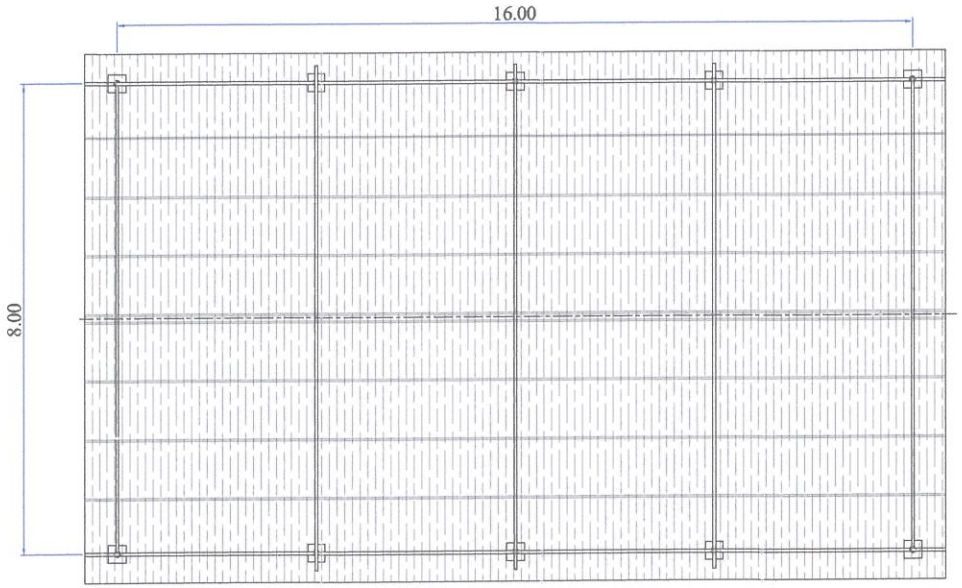

PLAN

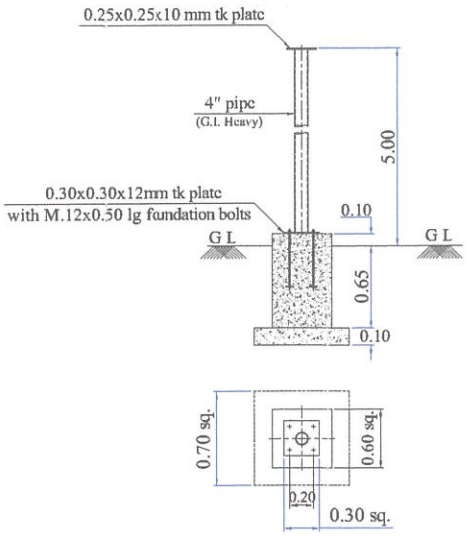

FOUNDATION DETAILS

All dimensions are in Meter, unless otherwise specified

			NAME	SIGNATURE
आईआरईएल (इंडिया) लिमिटेड मनवालकुरिच्चि IREL (India) Limited MANAVALAKURICHI		APPROVED	S.P. GANESHAN C M (CIVIL)	
TITLE Construction of Community Hall in Arayar Samithayam, Peachivilagam		CHECKED	R. SARATH KUMAR MANAGER (CIVIL)	
		DRAWN	T. MURALIDHARAN	
SCALE N.T.S		DRAWING NUMBER MK/CIVIL/104/30.06.2026		

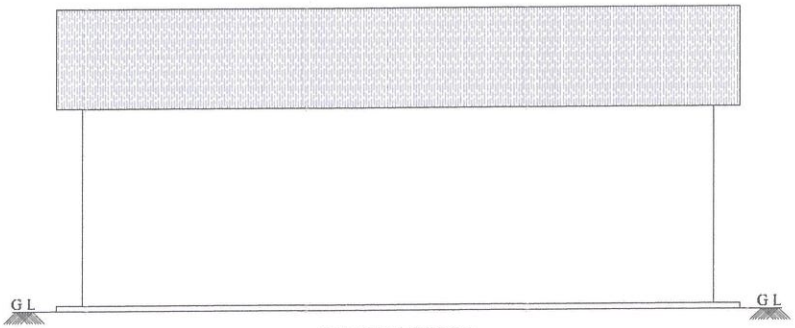

ELEVATION

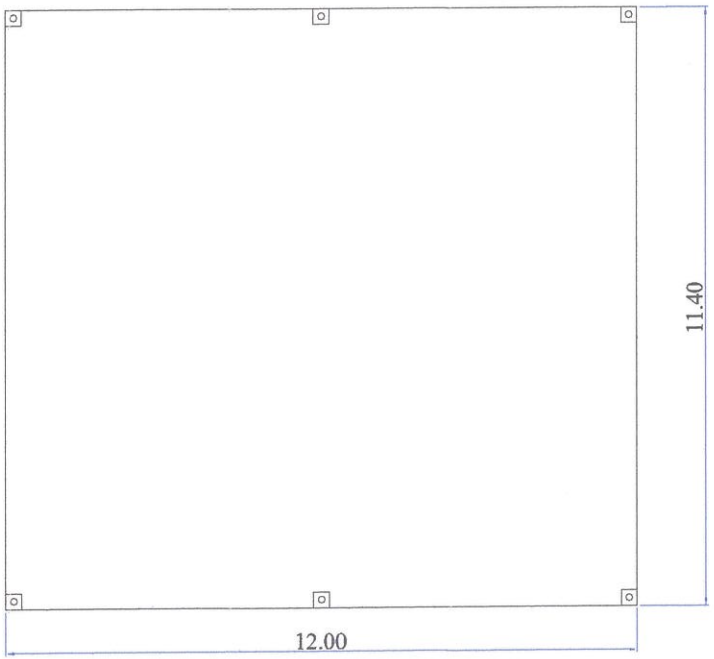

PLAN

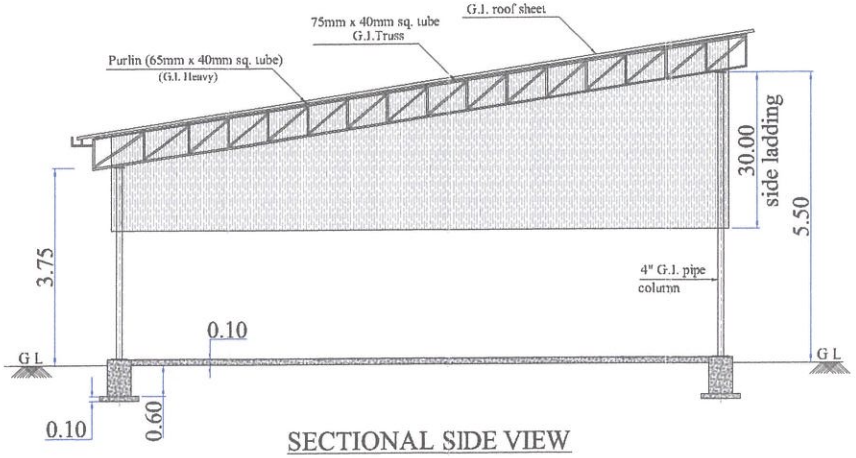

SECTIONAL SIDE VIEW

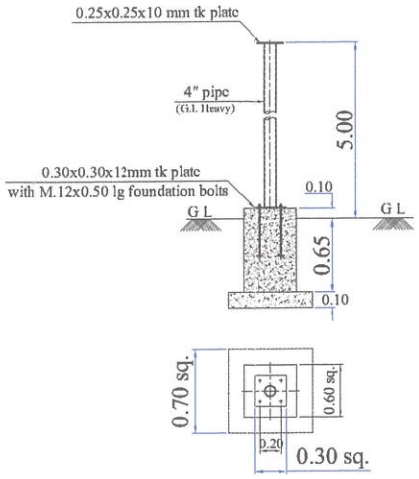

FOUNDATION DETAILS

All dimensions are in Meter

		NAME	SIGNATURE
आईआरईएल (इंडिया) लिमिटेड मणवालकुरिच्चि IREL (India) Limited MANAVALAKURICHI	APPROVED	S.P. GANESHAN C M (CIVIL)	
TITLE Construction of Community Hall in Arulmigu Devi Mutharamman Temple, Andarvilai	CHECKED	R. SARATH KUMAR MANAGER (CIVIL)	
	DRAWN	T. MURALIDHARAN	
SCALE N T S		DRAWING NUMBER MK/CIVIL/105/30.06.2026	

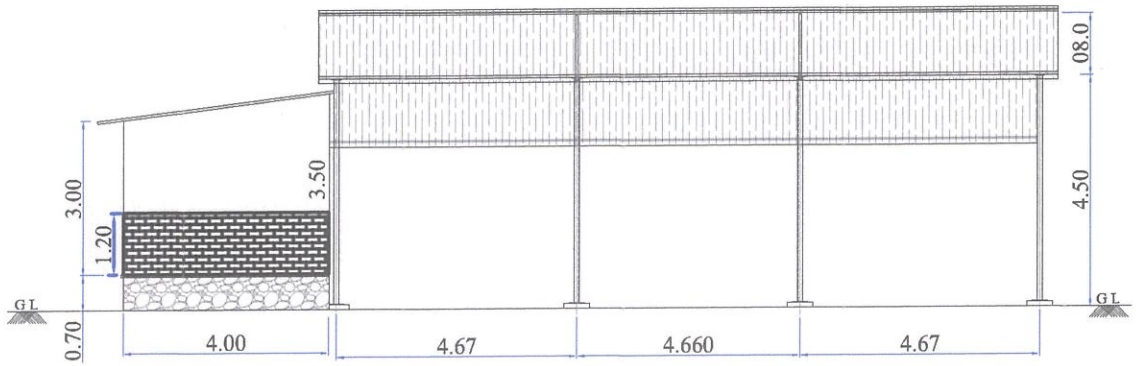

ELEVATION

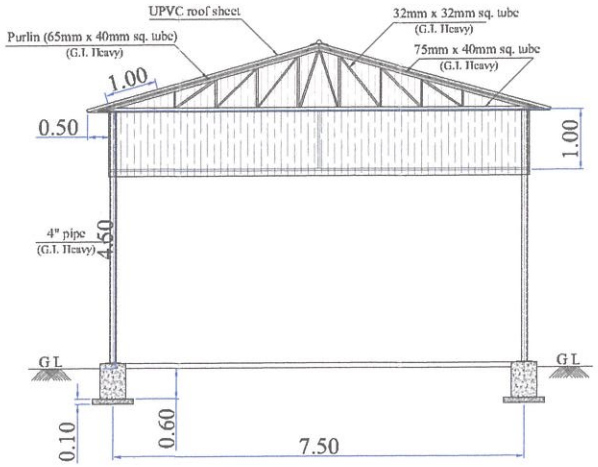

SECTIONAL SIDE VIEW

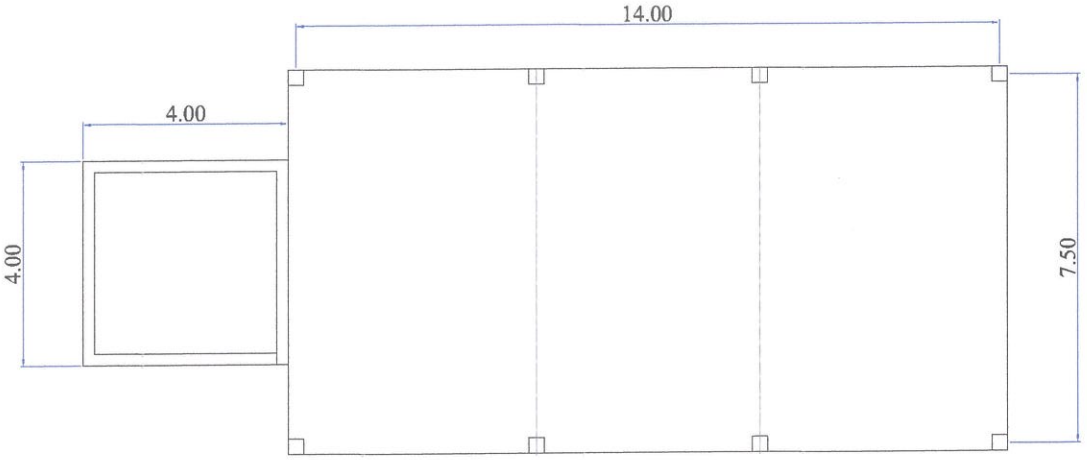

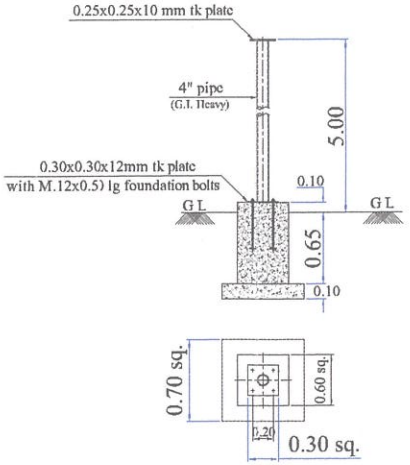

FOUNDATION DETAILS

All dimensions are in Meter

आईआरईएल (इंडिया) लिमिटेड मणवालकुरिच्चि IREL (India) Limited MANAVALAKURICHI		NAME	SIGNATURE
TITLE Construction of Community Hall in Nilliyamman Temple Kattukadai, Palapallam	APPROVED	S.P. GANESHAN C M (CIVIL)	
	CHECKED	R. SARATH KUMAR MANAGER (CIVIL)	
	DRAWN	T. MURALIDHARAN	
SCALE NTS		DRAWING NUMBER MK/CIVIL/106/30.06.2026	