REQUEST FOR PROPOSAL (RFP)

FOR

EXECUTION OF CIVIL WORK AT RETTP, BHOPAL

Tender No: IREL/HO/PT/2026/11

IREL (India) Limited

(A Government of India Undertaking)

Plot No.,1207, Veer Savarkar Marg, ECIL Building,
Prabhadevi, Mumbai-400028,
Tel No : 24220230/24211630
Website: www.irel.co.in

CIN No. U15100MH1950GOI008187

SCHEDULE OF TENDER

Sl. No.	Name of Work	Execution of Civil Work at RETTP, Bhopal, Madhya Pradesh
1	Type of Tender	Open Tender through CPP, Single Stage Two Bid System Two cover System
2	Tendering Mode: CPP Portal	Public tender (Two cover System) Pre-Qualification Bid Financial Bid
3	Cost of Tender Document	NIL
4	Earnest Money Deposit (EMD)	Rs. 39,251/-
5	Date & time of Starting of bid	25.11.2026
6	Date of closing of bid for submission of Bids	16.12.2026, 15.00 Hrs
7	Date & time of opening of Cover 1	17.12.2026, 16. 00 Hrs
8	Date & time of opening of Financial Bid	Shall be informed separately to the eligible bidders
9	Work Started Period	Within 30 days from the date of placement of the order.
10	Estimated Cost	Rs. 23,15,831/- (Including GST)
11	Validity of tender	120 days from bid due date
12	SD/PBG	5% of the contract value (Excluding GST)
13	Contact details of tender inviting authority	DGM – T (Projects) & I/c Purchase IREL (India) Limited Plot No. 1207, V. S. Marg, ECIL Building, Opp. Siddhi Vinayak Temple, Prabhadevi, Mumbai-400 028 Email: purchase-ho@irel.co.in; rpjha@irel.co.in Phone 022- 24211630 (Ext. No. 248)

DISCLAIMER

The information contained in this tender document (the **"TENDER"**) or subsequently provided to Bidder(s), whether verbally or in documentary or any other form, by or on behalf of IREL or any of its employees, is provided to Bidder(s) on the terms and conditions set out in this TENDER and such other terms and conditions subject to which such information is provided. The information provided is only for the information and reference of the Bidders.

This TENDER is not an agreement and is neither an offer by IREL to the prospective Bidder(s) or any other person. The purpose of this TENDER is to provide interested parties with information that may be useful to them in the formulation of their bid for participation in this TENDER. This TENDER includes statements, which reflect various assumptions and assessments arrived at by IREL in relation to the tender work. Such assumptions, assessments and statements do not purport to contain all the information that each Bidder may require. This TENDER may not be appropriate for all persons, and it is not possible for IREL, or its employees to consider the investment objectives, financial situation and particular needs of each party who reads or uses this TENDER. The assumptions, assessments, statements and information contained in this TENDER may not be complete, accurate, adequate or correct. Each Bidder should therefore, conduct its own investigations and analysis and should check the accuracy, adequacy, correctness, reliability and completeness of the assumptions, assessments, statements and information contained in this TENDER and obtain independent advice from appropriate sources.

Information provided in this TENDER to the Bidder(s) is on a wide range of matters, some of which may depend upon interpretation of law. The information given is not intended to be an exhaustive account of statutory requirements and should not be regarded as a complete or authoritative statement of law. IREL accepts no responsibility for the accuracy or otherwise for any interpretation or opinion on law expressed herein.

IREL, its employees and consultant make no representation or warranty and shall have no liability to any person, including any Bidder, under any law, statute, rules or regulations, principles of restitution or unjust enrichment or otherwise for any loss, damages, cost or expense which may arise from or be incurred or suffered on account of anything contained in this TENDER or otherwise, including the accuracy, adequacy, correctness, completeness or reliability of the TENDER and any assessment, assumption, statement or information contained therein or deemed to form part of this TENDER or arising in any way with qualification of Bidders for participation in the Bidding Process. IREL also accepts no liability of any nature whether resulting from negligence or otherwise howsoever caused arising from reliance of any Bidder upon the statements contained in this TENDER. IREL may, in its absolute discretion but without being under any obligation to do so, update, amend or supplement the information, assessment or assumptions contained in this TENDER.

The issue of this TENDER does not imply that IREL is bound to select and short-list qualified Bids for Price Bid stage or to appoint the Selected Bidder for the intended work, and IREL reserves the right to reject all or any of the Bids without assigning any reasons whatsoever.

The Bidder shall bear all its costs associated with or relating to the preparation and submission of its Bid including but not limited to preparation, copying, postage, delivery fees, expenses associated with any demonstrations or presentations which may be required by IREL or any other costs incurred in connection with or relating to its Bid. All such costs and expenses will remain with the Bidder and IREL shall not be liable in any manner whatsoever for the same or for any other costs or other expenses incurred by a Bidder in preparation or submission of the Bid, regardless of the conduct or outcome of the Bidding Process.

TABLE OF CONTENTS:

S. No.	Contents	Page No.
1	Introduction	5
2	Mode of bidding	5
3	Pre-Qualification Criteria	6
4	Scope of Work	7-9
5	Bill of Quantity	10-11
6	Special Terms and Condition	12-15
7	General Conditions of the Contract	16-49
8	Annexure – I Format for Correspondence with Bidders on “Ethics in tendering & other business dealings	50
9	Annexure – II Format for Undertaking to be Submitted by Bidders for Adopting Ethical Practices	51
10	Annexure – III Tender Acceptance Letter	52
11	Annexure – IV Certificate from practicing Chartered Accountant for eligible works	53
12	Annexure – V Particulars of bidder	54
13	Annexure – VI Required details of the tender document	55
14	Annexure – VII EMD Declaration	56
15	Annexure – VIII Proforma for Bank Guarantee for Earnest Money Deposit	57-58
16	Annexure – IX Proforma for BG towards Security Deposit (to be issued from a Scheduled Bank)	59-60
17	Annexure – X Proforma for Bank Guarantee against Performance	61-62
18	Annexure – XI Non-Blacklisting Declaration	63
19	Annexure-XII Price Bid format	64
20	Annexure XIII Drawing	65-66

1. REQUEST FOR PROPOSAL

1.1 Introduction:

IREL (India) Limited (the "IREL"), a Mini-Ratna Category-I company, is a Public Sector Enterprise of the Government of India invites competitive e-bids from authorized contractors for civil work at Acharpura, Bhopal, Madhya Pradesh

1.2 Mode of Bidding

The tender bids duly filled in all aspects and uploaded at CPP Portal on or before the scheduled time and date as mentioned in the tender enquiry will be considered for evaluation.

The Bids shall be prepared in two parts viz. PQ cum Technical Bid (Part 1) and Price Bid (Part 2).

Technical bid (Part 1) and Price Bid (Part 2) shall be submitted through CPP Portal. Bids submitted through CPP portal shall only be considered.

Technical Bid will be opened at the first instance and evaluated by IREL's concerned authority. In the second stage, financial bids of only the technically eligible offers will be opened for further evaluation and ranking before awarding the contract.

PQ cum Techno-commercial bid (Part 1)

It contains documents in support of eligibility criteria, self-attested tender document and any other document specifically specified in this tender document.

i.	The complete Qualifying Data as required in Prequalification Criteria (PQ)
ii.	Duly filled Tender documents, Annexures & Undertaking
iii	Any other technical details/documents etc. required to be submitted by the bidder as contained in the bid document

Part 2 shall contain Price Bid (to be submitted electronically).

This part shall contain only Schedule of prices duly filled in as per the Bid Proposal Schedules. No physical submission of hard copy is permitted.

Method of selection:

Part I of the bid will be evaluated and bidders meeting the PQ criteria and other tender conditions will be qualified as eligible bidders for opening of the price bids. The price bids opened subsequently will be scrutinized for responsiveness and IREL shall consider placement of order on the qualified bidder, whose offer shall be overall lowest. However, IREL reserves the right to accept or reject all or any tender without assigning any reasons and does not bind itself to accept the lowest offer.

Note: To assist in the examination of documents submitted by the bidder in support of eligibility criteria (PQ), IREL may, at its discretion, ask the Bidder for clarification of its bid. The request for clarification and the response shall be in writing and no change in the price or substance of the bid shall be sought, offered or permitted.

2. PRE-QUALIFICATION (PQ) CRITERIA

Bidder should meet the PQ criteria as mentioned under for further consideration of their bid. Bidder shall upload their PQ details and other details mentioned in the bid. Bidder shall fulfill the following to pre-qualification for the bid.

Sl. No.	PQ requirement	Documents required (As applicable)
1	Technical Competency: During last 7 years (Upto 31st October 2026) agency must have executed the following works in Government department/ Public Sector Undertaking/Public listed Company: - 1) One similar work of Rs. 18.52 lakhs OR 2) Two similar works of Rs. 11.60 lakhs each OR 3) Three similar works of Rs 9.26 lakhs each Definition of Similar Work(s): "Work includes fabrication and erection of sheds/roofing."	Copy of work Order along with the proof of completion OR The bidder along with copies of the Order(s) may submit certificate(s) from practicing Chartered Accountants stating the payments received and work completed, as the case may be, along with declaration on the letter head of the Bidder in respect of the works specified in Pre-Qualification Criteria.
2	Financial Capability: The Bidder should have a minimum average annual turnover of INR 7 lakhs over the last three audited financial years (i.e., FY 2023-24, FY 2024-25, FY 2025-26).	Copies of Profit & Loss account duly certified by the Chartered Accountant should be enclosed. OR A Certificate from the Chartered Accountant on their letter head certifying the financial turnover for the above said financial year may be submitted.
3	Valid MPPWD Contractor License/Registration	Document showing valid Contractor License issued by Madhya Pradesh Govt.

NB: Pre-qualification shall be carried out based on the documents submitted by the bidders for past performance, technical and financial capability, and shall be subject to verification, if required.

3. SCOPE OF WORK

Construction of Parking Sheds at RETTP, Bhopal

The work comprises design, fabrication, supply, transportation, erection, installation, painting, roofing and complete execution of Parking Shed-1 and Parking Shed-2 proposed in front of the Admin Building and Pilot Plant at Rare Earth & Titanium Theme Park (RETTP), Bhopal.

The work shall be executed as a complete and functional package in accordance with the approved drawings, applicable PWD SOR, CPWD specifications, relevant IS Codes/Standards and instructions of the Engineer-in-Charge.

1. Civil Foundation Works

The Contractor shall carry out all civil works required for supporting the parking shed structure, including:

- Setting out and marking of foundations and column locations.
- Excavation for pit foundations to the required dimensions, depth and levels, including disposal/stacking of excavated earth and backfilling with compaction wherever required.
- Providing and laying PCC 1:2:4 in foundation beds, complete with preparation, laying, compaction and curing.
- Providing and laying M-20 grade RCC for foundations and pedestals, including shuttering/formwork, mixing, placing, vibration, finishing and curing.
- Supply, cutting, bending, placing and fixing of reinforcement steel, including binding wire, spacers, chairs and cover blocks.
- Supply and fixing of foundation/anchor bolts with nuts, washers, templates and all required accessories.
- Supply and fixing of GI base plates, of size and thickness as per approved structural design/drawings.

2. Structural Steel Work

The Contractor shall supply, fabricate and erect the complete structural steel framework using approved M.S. tubular sections, including:

- Columns, trusses, rafters, frames, purlins, bracings and other structural members as required by the approved design.
- Cutting, drilling, shaping, welding, grinding, fabrication, assembly, hoisting, erection, alignment and levelling.
- Gusset plates, cleats, brackets, stiffeners, connection plates and other required structural accessories.
- Supply and fixing of MS nuts, bolts and washers for column supports and all structural connections.
- All welding and bolted connections shall be properly executed and tightened to provide a rigid and stable structure.
- Purlins shall be provided as required for supporting the roofing sheets and shall form an integral part of the structural system.

All structural steel members shall be of approved quality and suitable for the intended application.

3. Roofing Work

The Contractor shall supply and fix pre-coated GI profile roofing sheets of 0.50 mm thickness, generally conforming to the following requirements:

- Steel grade: 240 MPa
- Zinc coating: 120 GSM

- Epoxy primer: 5–7 microns on both sides
- Polyester top coat: 15–18 microns
- Protective guard film: Minimum 25 microns

Sheets shall be supplied in suitable lengths, up to 12 metres or as directed by the Engineer-in-Charge, based on the approved drawings and site requirements. The sheet length shall be reviewed to minimize unnecessary joints and ensure proper weather-tightness.

The roofing work shall include cutting, drilling, shaping, overlapping and fixing using 5.5 × 55 mm self-drilling/self-tapping screws with EPDM seals, along with ridge caps, flashing, edge trims and other accessories wherever required.

The completed roofing shall be properly aligned and weather-tight and leak-proof. Roofing work shall comply with IS:277 and other applicable standards.

4. Surface Preparation and Painting

After fabrication and erection, all exposed steel surfaces including columns, roof members, purlins, bracing members, base plates, gusset plates, connection plates and other steel components shall be properly cleaned and prepared for painting. The steelwork shall be provided with an approved primer coat followed by two or more coats of approved enamel/finish paint of the required shade, applied uniformly to obtain a smooth and even finish. Painting shall include surface preparation, removal of rust, dust, oil, grease and other foreign matter, application of primer and finish coats, necessary touch-up after erection/welding/bolting, and all materials, labour, scaffolding, tools and equipment required to complete the work as directed by the Engineer-in-Charge.

5. Fabrication, Erection and Installation

The Contractor shall provide all resources required for complete execution, including:

- Skilled and unskilled labour, supervisors and competent fabrication/erection personnel.
- Welding, cutting, drilling and fabrication equipment.
- Crane, lifting and handling equipment.
- Scaffolding, ladders, platforms and other erection arrangements.
- Measuring, levelling and alignment equipment.
- All necessary tools and tackles.

The Contractor shall ensure proper dimensional accuracy, alignment, verticality, stability and workmanship of the completed structure.

6. Transportation and Material Handling

The Contractor shall be responsible for transportation of all materials to the RETTP site, including loading, unloading, stacking, storage, shifting and handling of structural steel, roofing sheets, cement, reinforcement, bolts, plates and all other materials.

All materials shall be properly protected against damage during transportation, storage and installation. Any material damaged due to improper handling shall be replaced by the Contractor.

7. Safety and Protection

The Contractor shall provide all necessary safety arrangements and PPE, including safety helmets, shoes, gloves, safety harnesses, barricading, warning signs, safe scaffolding and lifting arrangements.

The Contractor shall ensure protection of existing buildings, equipment, roads, utilities and other site facilities during execution and shall be responsible for any damage caused due to its activities.

8. Completeness of Work

All materials, labour, equipment, fittings, fasteners, accessories and incidental works necessary for proper, safe and complete execution of the parking sheds shall be deemed included in the Contractor's scope, whether or not each minor item is separately identified in the BOQ.

The Contractor shall execute the work in a manner that ensures the completed parking sheds are structurally sound, stable, properly aligned, durable, weather-protected and fit for intended use.

10. Completion and Handing Over

The work shall be considered complete only after satisfactory completion of:

foundation and RCC works → reinforcement → anchor bolts/base plates → structural steel and purlins → roofing → welding/bolting → painting → finishing → site clearance.

The completed parking sheds shall be inspected and handed over to RETTP in a safe, stable, properly aligned, leak-proof, weather-tight and usable condition, to the satisfaction of the Engineer-in-Charge.

(Note: For any clarification regarding the scope of work, drawings, specifications or site conditions, the bidder/contractor shall contact the Engineer-in-Charge (EIC) before submitting the bid. No additional claim arising due to lack of clarification shall be entertained after award of the work) (EIC:- Dr. B. S. Talwar, Chief Manager-Technical, email: bikram.talwar@irel.co.in.; Ph No. 8591921698**)**

(Note: All works shall be executed as per the BOQ, drawings, technical specifications, site conditions, and the instructions of the Engineer-in-Charge (EIC). The contractor shall execute all incidental and ancillary works necessary for the satisfactory completion of the project to suit the site requirements, even if such items are not explicitly mentioned in the BOQ but are essential for proper execution and completion of the work.)

4. BILL OF QUANTITY

S.No.	Description Of Item	Unit	Quantity
1	Earth work in excavation by mechanical means (Hydraulic excavator) / manual means over areas including dressing of sides and ramming of bottom disposal of excavated earth, lead up to 50m and lift up to 1.5m, disposed earth to be levelled and neatly dressed. (No extra lift is payable if work is done by mechanical means) All kinds of soil	CUM	16.80
2	Providing and laying in position cement concrete of specified grade excluding the cost of centering and shuttering - All work upto plinth level :		
	M-15 – Grade concrete	CUM	2.10
3	Providing and laying in position specified grade of reinforced cement concrete (nominal / design mix with 20mm nominal size graded stone aggregate) excluding the cost of centering, shuttering, finishing and reinforcement - All work up to plinth level :		
	M-20 Grade Concrete	CUM	7.14
4	Centering and shuttering in cluding strutting, propping etc. and removal of form for:		
	Foundations, footings, bases of columns, etc. for concrete upto plinth level	SQM	42.00
5	Providing and fixing mild steel round holding down bolts with nuts and washer plates complete.	KG	242.73
6	Structural steel work in single section fixed with or without connecting plate including cutting, hoisting, fixing in position and applying a priming coat of approved steel primer all complete as per drawing and direction of EIC.	KG	492.35
7	Steel work in built up M.S. tubular section (round, square or rectangular hollow tubes etc.) trusses/frame work etc. including cutting, hoisting, fixing in position and applying a priming coat of approved steel primer, including welding and bolted with special shaped washersetc. Complete as per drawing and direction of EIC.		
	Hot finished welded type tubes	KG	12712.50

8	Providing and fixing precoated galvanised iron profile sheets (size, shape and pitch of corrugation as approved by Engineer-in-charge) 0.50 mm + 0.05 %, total coated thickness with zinc coating 120 gsm as per IS: 277 in 240 mpa steel grade, 5-7 microns epoxy primer on both side of the sheet and polyester top coat 15-18 microns. Sheet should have protective guard film of 25 microns minimum to avoid scratches while transportation and should be supplied in single length upto 12 mtr or as desired by Engineer-in-charge. The sheet shall be fixed using self-drilling /self-tapping screws of size (5.5x 55mm) with EPDM seal, complete upto any pitch in horizontal/ vertical or curved surfaces excluding the cost of purlins, rafters and trusses and including cutting to size and shape wherever required as per drawing and direction of EIC.	SQM	508.50
9	Finishing walls by any mechanical or manual means with Deluxe Multi surface paint system for interiors and exteriors using Primer as per manufacturers specifications : Painting Steel work with Deluxe Multi Surface Paint to give an even shade. Two or more coat applied @0.90 ltr/10 sqm over an under coat of primer applied @ 0.80 ltr/ 10 sqm of approved brand or manufacture.	SQM	206.69

(As per drawing and attached detailed BOQ)
The evaluation shall be based on overall L1 basis

5. SPECIAL TERMS AND CONDITIONS

1. Site Visit: Prior to quoting rates, the bidders are advised to visit the RETTP project site, Acharpura, Bhopal. Contact details of site officials are as under:
   a) Dr. B. S. Talwar, Chief Manager-Technical, email: bikram.talwar@irel.co.in.; Ph No. 8591921698
   OR
   b) Mr. Ravi Prakash Jha, GM –T (Projects), Email: rpjha@irel.co.in ; Ph No. 8104997192

2. Location: ACHARPURA, Industrial Area PLOT NO. 49 M, Near Gokuldas Exports TEHSIL HUZUR, DISTRICT BHOPAL, MADHYA PRADESH, 462030

3. Duration: The civil work shall commence within 30 days from the date of placement of the order, and the complete sequence of activities as per the scope detailed above shall be completed within 120 days from the date of commencement of work.

4. **Liquidated Damages (LD):** As per GCOC of the tender

5. **Defect Liability Period (DLP):** The Defect Liability Period (DLP) shall be applicable for 12 months from the date of completion of the project.

6. **Earnest Money Deposit**
   Tenders shall remit EMD (Rs. 39,251.00) through NEFT/RTGS in favour of M/s IREL (India) Limited as mentioned in the schedule of tender or alternatively, EMD can be remitted by way of 'demand draft' or 'BG' in favour of IREL. BG should be from Indian scheduled Banks excluding co-operative banks. Details of payment shall be uploaded in the portal as a separate PDF document. In case of payment through DD/BG, the original should be submitted offline within 7 days of opening of bid date. However, if the details of the payment of EMD through DD/BG are not uploaded in the bid, the bid will be summarily rejected.

   EMD if any is liable to be forfeited if:
   i. The tenderer changes the terms and conditions or prices or withdraw his quotation subsequent to the date of opening.
   ii. The tenderer fails to accept the order when placed or fails to commence supplies/works/services after accepting the order.
   iii. In case bidder submits false/fabricated documents.

7. **SECURITY DEPOSIT**
   The successful tenderer (referred as successful bidder) is required to furnish Demand draft/ RTGS/NEFT or Bank Guarantee (Format of BG is attached), in favour of IREL (India) Limited, Mumbai for an amount equivalent to five (5) per cent 5% of the contract value towards Security Deposit towards the satisfactory performance of the contract, within 2 weeks of the placement of order covering the period of the contract plus two months. The same is to be forwarded to DGM -T (I/c Purchase), Plot No. 1207, V.S. Marg, Prabhadevi, Mumbai – 400028.

   The SD shall not bear any interest and is liable to be forfeited for unsatisfactory completion or on abandonment of the supply/ work order. Additional amount of SD due to enhancement in scope of work is to be submitted by the successful tenderer.

   REFUND OF SD
   1. Before releasing SD in respect of supplies, a "No Due Certificate" shall be issued by EIC duly countersigned by head of the department after ensuring that no amounts are recoverable from the agency after 18 months from the date of completion of work.
   2. EIC/OIC shall recommend release of SD.
   3. On receipt of "no dues certificate" from EIC, SD shall be refunded at the earliest, if supplier is not liable to pay any money to IREL under any other contract.

   FoRFEITURE OF SD

The SD shall stand forfeited in favour of IREL, without any further notice to the Supplier in the following circumstances:

1. In case of any failure whatsoever on the part of the Supplier at any time during performance of his part of the contract including the extended periods of contract, where notice is given and time for rectification allowed.
2. If the Supplier indulges at any time in any subletting/ sub-contracting of any portion of the supplies without approval of IREL.
3. If the Supplier abandons the supply /order. If the supplier not fulfills the guarantee condition during warranty period.

8. **PAYMENT TERMS**

1. The work shall be executed within the stipulated completion period. The contractor may raise Running Account (RA) Bills based on the actual quantity of work executed at site. Payment against each certified RA Bill shall be made for the actual work measured and executed, after verification and certification by the Engineer-in-Charge (EIC)/Officer-in-Charge (OIC).
2. 95% payment shall be done within 30 days on due certification of Bill/ running Account Bill bythe Engineer-in-Charge and balance 5% ("Retention Money") shall be released after issuance of Final Acceptance Certificate (FAC) by IREL.
3. The Contractor shall submit to IREL on account bill (also known as 'Running account Bill') onmonthly basis showing the estimated contract value of the work executed till the date of raisingthe bill accompanied by detailed measurements, thereby indicating the physical progress of work. The contractor will be paid the amount admissible on the certificate of the engineer - incharge the amount due to him on account of the estimated value of the permanent work executed at site, after deduction there from the amount already paid, the value of materials supplied by the company (if any), Income-tax, or any other statutory dues as applicable.
4. The final payment shall be released after satisfactory completion of the entire work, submission of the final bill along with all required documents, and certification by the EIC/OIC. All payments shall be made within 30 days from the date of submission of the duly certified RA Bill/Final Bill, subject to acceptance of the work and statutory deductions, if any.
5. Enhancement or decreases of taxes, duties or prices of components, etc., will not affect the rates for the job, no difference shall be paid or claimed as a result of the above.

9. **MODE OF PAYMENT:**

The payment shall be released after deducting the following:

1. Compensation recoverable if any.
2. LD recoverable, if any.
3. Recoveries on account of contractee's facilities and services, if any.
4. Deduction, if any, towards re-coupment of any amounts forfeited, adjusted, deducted out of security deposit.
5. All Statutory deduction, if any, as per rules.
6. Deduction as per IT Act, 1961, if any.
7. Any other deduction related to this contract.

10. **Effect and validity of bid:**

1. The submission of any bid connected with these documents and specifications shall constitute an agreement that the bidder shall have no cause of action or claim against IREL for rejection of his bid.
2. The bid shall be valid for a period of 120 days from bid due date.

11. Inspection of site and other conditions:

Once the tenderer submits his bid, the following are fully understood by both the parties (i.e. IREL and the Tenderer) binding on them: (a) Before the tenderer submits his offer, the tenderer is deemed to have carefully examined the Technical Specification, General and Special Conditions of Contract and other details relating to tender requirement and fully acquaint himself as to all conditions and matters which may in any way affect the work or the cost thereof. The bidder shall be deemed to have obtained on his own and independently all necessary information for the purpose of preparing the bid and his bid as accepted shall be deemed to have taken into account all contingencies as may arise due to such information or lack of the same. (b) IREL shall not entertain any request for clarifications from the bidders regarding such local conditions. Any neglect or omission or failure on the part of the bidder in obtaining necessary and reliable information as stated above or on any other

matter affecting the bidder shall not relieve him from any risks or liabilities or the entire responsibility for completion of the work in accordance with the tender document. (c) The bidder shall be deemed to have acquainted himself with the Indian Income Tax Act, 2025, Indian Companies Act, 1956, Indian Customs Act, 1962, Indian Electricity Act 2003, Factories Act 1948, CEA Rules, Pollution Control Regulation and other related Rules, Acts & Laws prevalent in India and as amended from time to time as applicable to this tender.

RIGHT TO ACCEPT OR REJECT ANY OR ALL BIDS:

M/s IREL reserves the right to accept or reject any bid, and to cancel the bidding process and reject all bids, at any time prior to award of contract without assigning any reason whatsoever and without thereby incurring any liability to the affected bidder or bidders on the grounds for the IREL's action.

13.. RELATED PARTY:

Related parties should not quote for the tender separately. If it is noticed that related parties submitted separate quotation, the same shall be liable to be rejected.

14. INCOME TAX:

Income tax inclusive of surcharge and any other tax if applicable shall be deducted at source.

15. FAILURE AND TERMINATION

If the bidder fails in the performance of the contract in the manner and within the time fixed or there is likelihood of an anticipatory breach of whole or part of the contract, the Company will have the right to rescind the contract and have it performed through other party at the risk and cost of the bidder.

16. Rate

The rates shall be quoted in GeM portal and price breakup to be given as per the schedule. The rate shall be fixed and firm during the tenure of the contract.

17. If there is a change in the name / composition of the tenderer's firm / company's etc. arising out of merger / collaboration with some other company or for any other reason or, if any changes take place in the proprietorship or partnership of the tenderer's firm, the agreement shall be binding on the new entity. IREL should be intimated within 30 (Thirty) days of such changes, failing which all payments shall be withheld.

18. IREL Mumbai reserves the right to change any condition of the tender and also reject any bid without assigning any reason.

19. The tender is liable to be disqualified if:

(i) tender is not submitted in accordance with terms and conditions stipulated in tender document.

(ii) tenderer increases his quoted prices during validity of the quotation period or its extended period, if any.

(iii) the tender submitted is a conditional tender.

(iv) tender is incomplete and / or received after the due date and time.

(v) information submitted found to be incorrect / false at any stage during the processing / tenure, including extension if any, of the lease agreement.

(vi) it comes to our knowledge that some parties have formed a cartel and resulting in delay / holding up the processing of tender and they will be further liable to be disqualified for a further period of two years for any tender / lease agreement floated by IREL.

(g) the tenderer has been disqualified by any PSU/Govt./ IREL at any time in the past for supply of services referred to in the tender.

18. Assignment and Subletting:

The tenderer shall not assign, sublet, or transfer the contract or any part thereof or any benefit or interest

therein or there under without the written consent of IREL.

19. **DPE instructions**

IREL (India) Limited is onboard with TReDS platform of M/s RXIL & KredX for facilitating Bill Discounting for MSME's.

As per DPE/7(4)/2007-Fin dt 21/08/2020 , it is mandatory to get all the MSME vendors registered on the platform.

Vendors can get themselves registered at: https://onboarding.rxil.in/customerapp/home. The registration fees of MSMEs on TReDS Platform is Free of Cost as per the new guidelines provided by SIDBI.

For any registration queries, vendors may please contact,

20. **Purchase Preference for Micro & Small Enterprises (MSE's):** The subject tender is works in nature and exemption is not applicable under Public Procurement Policy for MSEs.

6. GENERAL CONDITIONS OF THE CONTRACT

1.0 Definitions:

In the contract (as hereinafter defined), the following 'words' and 'Definitions' expression shall have the meaning hereby assigned to them except where the context otherwise requires:

a) "Employer" means IREL (India) Limited (IREL) having its registered office at Plot No. 1207, Veer Savarkar Marg, Near Siddhi Vinayak Temple, Prabhadevi, Mumbai- 400028. The term Employer includes successors, assigns of IREL.

b) "Contractor" means the person or persons, firm or company whose tender has been accepted by the Employer and includes the Contractors' personal representatives, successors and permitted assignees.

c) "Engineer" means the representative of IREL or the other Engineer appointed from time to time by the Employer and notified in writing to the contractor to act as Engineer for the purposes of the contract in place of the said representative.

d) "Engineer's Representative" means any resident engineer or assistant of the Engineer or any other employee or agent appointed from time to time by the Employer or the Engineer to perform the duties set forth in Clause 1.5 hereof and whose authority shall be notified in writing to the Contractor by the Engineer.

e) "Work" shall mean and include all works specified or setforth and required in and by the specifications, drawing and schedule hereto annexed or to be implied therefrom or incidental thereto or to be hereafter specified or required in such explanatory instructions and drawings (being in conformity with the original specification, drawing and schedule) and also such additional instructions and drawings not in conformity as aforesaid as shall from time to time, during the progress of the work hereby contracted for, be supplied by the Employer.

f) "Contract" means the Invitation to tender, Instructions to Tenderers, General Conditions of Contract, Special. Conditions of Contract, Specifications, Drawings. Tender Schedule showing approximate quantities, quoted rates and amount against each item, Time Schedule, Letter of Intent/Award, Tender and Contract agreement.

g) "Contract Price" means:

In the case of Lump sum Contracts, the price payable to the Contractor as mentioned in the Contract for each line item. Price is fixed & firm during the entire duration of contract subject to price reduction clause in case of delay in performance; however, price is subject to price variation clause as per special conditions of contract, if any.

In the case of Item Rate Contracts, Rates by the item rates quoted by the tenderer and accepted by the Company for the various items.

h) "Constructional Plant" means all appliances or things of whatsoever nature as required or about the execution, completion or maintenance of the Works or, Temporary Works (as hereafter defined) but does not include materials or other things intended to form or forming part of the permanent work or temporary housing, hutting, offices & Stores etc.

i) "Temporary Works" means all temporary works of every kind required in or about the execution, completion or maintenance of the works.

j) "Drawings" means the drawings referred to in the Specification and any modification of such drawings approved in writing by the Engineer and such other drawings as may from time to time be furnished or approved in writing by the Engineer.

k) "Site "means the lands and other places envisaged by the Employer where the Works are to be executed or carried out.

l) "Letter of Intent" is an intimation by a letter to tenderer that tender has been accepted in accordance with the provisions contained in that letter.

m) "Approved" means approved in writing including subsequent written confirmation of previous verbal approval and "approval" means approval in writing including aforesaid.

1.2 **Singular & Plural** : Words importing the singular only also include the plural and vice versa where the context requires.

1.3 **Clause Headings or Marginal notes**: The Clause headings or marginal notes in these General Conditions shall not be deemed to be part thereof or be taken into consideration in the interpretation or construction thereof or of the contract.

1.4 **Specification**: The term "Specification" shall mean schedules, detailed designs, statements of technical data, performance characteristics and all such particulars mentioned as such in the contract. In the absence of any specific specifications issued by the Employer, the specifications issued by the BIS will apply.

1.5 ENGINEER-IN-CHARGE:

The Engineer-in-charge shall represent and act on behalf of IREL at all times during the currency of the all notices, instructions, orders, certificates, approvals and all other communications under this Contract shall be given by the Engineer-in-charge, except as herein otherwise provided.

The Engineer-in-charge shall have authority for

- General supervision, follow up of supply and direction of the Works
- Direction to stop the Works whenever such stoppage may be necessary to ensure the proper execution of the works
- To reject all Works and Materials which do not conform to the contract specifications. The Engineer-in-charge shall have no authority to relieve the CONTRACTOR of any of his duties or obligations under the contract nor except as expressly provided here-in-under or elsewhere in the Contract to order any work involving delay or any extra payment by IREL or to make any variation of or in the Works.

2.0 ASSIGNMENT AND SUB-LETTING:

2.1 The Contractor shall not assign the Contract or any part thereof or any benefit or interest therein or thereunder (other than a charge in favour of the Contractor's Bankers of any money due or to become due under this Contract) without the prior written consent of Employer.

2.2 The Contractor shall not sub-let the whole or part of the Works except where otherwise provided by the Contract, and even then only with the prior written consent of the Employer and such Consent if given shall not relieve the Contractor from any liability or obligation under the contract and he shall be responsible for the acts, defaults and neglects of any Sub-contractor, his agents, servants or workmen as fully as if they were the acts, defaults or neglects of the Contractor, his agents, servants or workmen Provided always that the provision of labour on a piecework basis shall not be deemed to be a sub- letting under this clause.

2.3 CONTRACTOR shall supervise and direct the work of all SUB-CONTRACTORS and shall be responsible for co-coordinating their work. If CONTRACTOR fails to correct, or commence to correct and execute the correction with due diligence of deficient or defective work performed by any SUB-CONTRACTOR within reasonable time (provided it doesn't materially impact safe operation of plant), after receipt by CONTRACTOR of a notice from EMPLOYER with respect thereto. EMPLOYER may (but shall not be obligated to), after seven days following receipt by CONTRACTOR of an additional notice, and without prejudice to any other right or remedy take all reasonable steps to remedy such defective or deficient work at risk and cost of CONTRACTOR.

2.4 CONTRACTOR shall require all SUB-CONTRACTORS to perform in accordance with the relevant requirements of the CONTRACT including FINAL PROPOSAL, all APPLICABLE LAWS and APPLICABLE PERMITS, Prudent Utility Practice, Good Engineering Practices, the requirements of the NIT, and all Warranties of SUB-CONTRACTORS/SUBVENDORS and Manufacturers and all insurance policies relating to the PLANT or the WORK.CONTRACTOR shall be solely responsible for paying each SUB-CONTRACTOR and any other person to whom any amount is due from CONTRACTOR for services, equipment, construction equipment, materials or supplies otherwise related to the PLANT or the WORK.

2.5 CONTRACTOR shall take all reasonable steps and actions to ensure that such services, equipment, construction equipment, materials and supplies and the like have been or will be received, inspected and approved and that such services have been or will be properly performed.

2.6 EMPLOYER shall not be deemed by virtue of the CONTRACT to have any contractual obligation to or relationship with any SUB-CONTRACTOR.

3.0 EXTENT OF CONTRACT:

The Contract comprises the construction, completion and maintenance of the works and except in so far as the contract otherwise provides, the provision of all labour, materials, constructional plant, temporary works and everything whether of a temporary or permanent nature required in and for such construction, completion and maintenance.

4.0 CONTRACT DOCUMENTS:

4.1 CUSTODY OF DRAWINGS:

The drawings shall remain in the sole custody of the Engineer but two copies thereof shall be furnished to the Contractor free of cost. The Contractor shall provide and make at his own expense any further copies required by him. On the completion of the contract, the Contractor shall return to the Engineer all drawings provided under the contract, The Contractor shall give adequate notice in writing to the Engineer or Engineer's representative, of any further drawings or specifications that may be required for the execution of the works or otherwise under the contract.

4.2 ONE COPY OF DRAWINGS TO BE KEPT ON SITE:

One copy of the drawings furnished to the Contractor as aforesaid shall be kept by the Contractor on the site and the same shall at all reasonable time be available for inspection and use by the Engineer and the Engineer's representative and by any other person authorised by the Engineer in writing.

4.3 FURTHER DRAWINGS AND INSTRUCTION:

The Engineer shall have full power and authority to supply to the Contractor from time to time during the progress of the works such further drawings and instructions as shall be necessary for the purpose of the proper and adequate execution and maintenance of the works and the Contractor shall carry out and be bound by the same.

5.0 CONTRACT AGREEMENT:

The Contractor shall enter into and execute a Contract Agreement in the form annexed hereto within the specified time in Letter of Intent/ Award and in default there of the earnest money paid by the Contractor shall be forfeited and acceptance of his Tender shall be considered as withdrawn. The cost of the stamp fee of the agreement is to be borne and paid by the Contractor.

6.0 MODIFICATIONS IN CONTRACT:

All modifications leading to changes in the CONTRACT with respect to technical or commercial aspects including terms of completion period shall be considered valid only when amendment to the CONTRACT is issued by the Employer.

The modification or amendment of the CONTRACT for an adjustment in the CONTRACT PRICE and/ or COMPLETION DATE in accordance with the applicable provision of the CONTRACT, if any, shall be subject to mutual agreement.

IREL shall not be bound by any printed conditions or provisions in the CONTRACTOR's bid forms or acknowledgement of CONTRACT and other documents which support to impose any condition at variance with or supplemental to CONTRACT.

7.0 USE OF CONTRACT DOCUMENTS AND INFORMATION:

7.1 The CONTRACTOR shall not, without the IREL's prior written consent, disclose the CONTRACT or any provision thereof, or any specification, plan, drawing, pattern, sample or information furnished by or on behalf of the IREL in connection therewith, to any person other than a person employed by the CONTRACTOR in the performance of the CONTRACT. Disclosure to any such employed person shall be made in confidence and shall extend only so far as may be necessary for purpose of such performance.

7.2 The CONTRACTOR shall not without the IREL's prior written consent, make use of any document or information enumerated in Clause 7.1 except for purpose of performing the CONTRACT.

7.3 Any document other than CONTRACT, itself, enumerated in Clause 7.1 shall remain the property of the IREL and shall be returned (all copies) to the IREL on completion of the CONTRACTOR's performance under the CONTRACT, if so required by the IREL.

7.4 CONTRACTOR TO INFORM HIMSELF FULLY:

The CONTRACTOR in fixing his rate shall for all purpose whatsoever reason may be, deemed to have himself independently obtained all necessary information for the purpose of preparing his tender and his tender as accepted shall be deemed to have taken into account all contingencies as may arise due to such information or lack of same. The correctness of the details, given in the Tender Document to help the CONTRACTOR to make up the tender is not guaranteed.

The CONTRACTOR shall be deemed to have examined the CONTRACT DOCUMENTS, to have generally obtained his own information in all matters whatsoever that might affect the carrying out of the works at the schedules rates and to have satisfied himself to the sufficiency of his tender. Any error in description of quantity or omission there from shall not vitiate the CONTRACT or release the CONTRACTOR from executing the work comprised in the CONTRACT according to DRAWINGS and SPECIFICATIONS at the scheduled rates. He is deemed to have known the scope, nature and magnitude of the WORKS and the requirements of materials and labour involved etc., and as to what all works he has to complete in accordance with the CONTRACT documents whatever be the defects, omissions or errors that may be found in the DOCUMENTS. The CONTRACTOR shall be deemed to have visited surroundings, to have satisfied himself to the nature of all existing structures, if any, and also as to the nature and the conditions of the Railways, Roads, Bridges and Culverts, means of transport and communication, whether by land, water or air, and as to possible interruptions thereto and the access and egress from the site, to have made enquiries, examined and satisfied himself as to the sites for obtaining sand, stones, bricks and other materials, the sites for disposal of surplus materials, the available accommodation as to whatever required, depots and such other buildings as may be necessary for executing and completing the works, to have made local independent enquiries as to the sub-soil, subsoil water and variations thereof, storms, prevailing winds, climatic conditions and all other similar matters affecting these

works. He is deemed to have acquainted himself as to his liability of payment of Government Taxes, Customs duty and other charges, levies etc.

Any neglect or omission or failure on the part of the CONTRACTOR in obtaining necessary and reliable information upon the foregoing or any other matters affecting the CONTRACT shall not relieve him from any risks or liabilities or the entire responsibility from completion of the works at the scheduled rates and times in strict accordance with the CONTRACT.

It is, therefore, expected that should the CONTRACTOR have any doubt as to the meaning of any portion of the CONTRACT DOCUMENT, he shall set forth the particulars thereof in writing to IREL in duplicate, before submission of tender. IREL may provide such clarification as may be necessary in writing to CONTRACTOR, such clarifications as provided by IREL shall form part of CONTRACT DOCUMENTS.

No verbal agreement or inference from conversation with any effect or employee of the IREL before, during or after the execution of the CONTRACT AGREEMENT shall in any way affect or modify and of the terms or obligations herein contained. Any change in layout due to site conditions or technological requirement shall be binding on the CONTRACTOR and no extra claim on this account shall be entertained.

7.5 GENERAL INFORMATION:

a) **Location of Site:** The proposed location of Project site is defined in the Special Conditions of Contract.

b) **Access by Road:** CONTRACTOR, if necessary, shall build other temporary access roads to the actual site of construction for his own work at his own cost. The CONTRACTOR shall be required to permit the use of the roads so constructed by him for vehicles of any other parties who may be engaged on the project site. The CONTRACTOR shall also facilitate the construction of the permanent roads should the construction there of start while he is engaged on this work. He shall make allowance in his tender for any inconvenience he anticipates on such account. Non-availability of access roads, railway siding and railway wagons for the use of the CONTRACTOR

shall in no case condone any delay in the execution of WORK nor be the cause for any claim for compensation against the EMPLOYER.

c) **Scope of Work:** The scope of WORK is defined in the Technical Part of the tender document. The CONTRACTOR shall provide all necessary materials, equipment, labour etc. for the execution and maintenance of the WORK till completion unless otherwise mentioned in the Tender Document.

d) **Water Supply:** Contractor will have to make his own arrangements for supply of water to his labour camps and for works. All pumping installations, pipe network and distribution system will have to be carried out by the Contractor at his own risk and cost. Alternatively, IREL at his discretion may endeavour to provide water to the Contractor at its source of supply provided the Contractor makes arrangement for pipe networks from source of supply and such distribution pipe network shall have prior approval of the Engineer-in-Charge so as not to interfere with the layout and progress of the other construction works. In such case, the rate for water shall be deducted from the running account bills (Subject to rate of deduction specifically mentioned in the tender, if any). However, IREL does not guarantee the supply of water and this does not relieve the Contractor of his responsibility in making his own arrangement and for the timely completion of the various works as stipulated.

e) **Power Supply:** Subject to availability, IREL will supply power at 400/440 V at only one point at the nearest sub-station, from where the CONTRACTOR will make his own arrangement for temporary distribution. The point of supply will not be more than 500 m away from the CONTRACTOR'S premises. All the works will be done as per the applicable regulations and passed by the ENGINEER-IN-CHARGE. The temporary line will be removed forthwith after the completion of work or if there is any hindrance caused to the other works due to the alignment of these lines, the CONTRACTOR will re-route or remove the temporary lines at his own cost. The CONTRACTOR at his cost will also provide suitable electric meters, fuses, switches, etc. for purposes of payment to IREL which should be in the custody and control of the IREL. The cost of power supply shall be payable to IREL every month for Construction Works which would be deducted from the running account bills (subject to rate of deduction specifically mentioned in the tender, if any). IREL shall not, however, guarantee the supply of electricity nor have any liability in respect thereof. No claim for compensation for any failure or short supply of electricity will be admissible.

It shall be the responsibility of the CONTRACTOR to provide and maintain the complete installation on the load side of the supply with due regard to safety requirement at site. All cabling, equipment, installations etc. shall comply in all respects with the latest statutory requirements and safety provisions, i.e., as per the Central/State Electricity Acts and Rules etc. The CONTRACTOR will ensure that his equipment and Electrical Wiring etc., are installed, modified, maintained by a licensed Electrician/Supervisor. A test certificate is to be produced to the ENGINEER-IN-CHARGE for his approval, before power is made available.

At all times, IEA regulations shall be followed failing which the IREL has a right to disconnect the power supply without any reference to the CONTRACTOR. No claim shall be entertained for such disconnection by the ENGINEER-IN-CHARGE. Power supply will be reconnected only after production of fresh certificate from authorized electrical supervisors.

The IREL is not liable for any loss or damage to the CONTRACTOR's equipment as a result of variation in voltage or frequency or interruption in power supply or other loss to the CONTRACTOR arising therefrom.

The total requirement of power shall be indicated by the tenderer along with his tender.

7.6 STANDARDS:

The goods and services supplied under this CONTRACT shall conform to the standards mentioned in the technical specifications and when no applicable standard is mentioned, CONTRACTOR shall follow best engineering practices.

7.7 PRIORITY OF CONTRACT DOCUMENTS:

Except if and the extent otherwise provided by the Contract, the provisions of the General Conditions of Contract and Special Conditions shall prevail over those of any other documents forming part of the CONTRACT. Several documents forming the CONTRACT are to be taken as mutually explanatory of one another, but in case of ambiguities or discrepancies the same shall be explained and adjusted by the ENGINEER-IN-CHARGE who shall thereupon issue to the

Contractor instructions thereon and in such event, unless otherwise provided in the Contract, the priority of the documents forming the Contract shall be as follows :

1) The Contract Agreement;

2) The Letter of Acceptance;

3) The Instructions to Bidders(ITB);

4) Special Conditions of Contract (SCC);

5) General Conditions of Contract (GCC)

6) Any other document forming part of the Contract.

Works shown in the DRAWING but not mentioned in the SPECIFICATIONS or described in the SPECIFICATIONS without being shown in the DRAWINGS shall nevertheless be deemed to be included in the same manner as if they had been specifically shown upon the DRAWINGS and described in the SPECIFICATIONS.

7.8 SPECIAL CONDITIONS OF CONTRACT:

Special Conditions of Contract shall be read in conjunction with the General Conditions of Contract, specification of Work, Drawings and any other documents forming part of this CONTRACT wherever the context so requires. Notwithstanding the sub-division of the documents into these separate sections and volumes, every part of each shall be deemed to be supplementary to and complementary of every other part and shall be read with and into the CONTRACT so far as it may be practicable to do so.

Where any portion of the General Conditions of Contract is repugnant to or at variance with any provisions of the Special Conditions of Contract, unless a different intention appears, the provisions of the Special Conditions of Contract shall be deemed to over-ride the provisions of the General Conditions of Contract and shall to the extent of such repugnancy, or variations, prevail.

8.0 PATENT INFRINCPPENT:

8.1 CONTRACTOR shall at all times, indemnify and keep indemnified IREL against all claims or suits and defend, at its own cost, any suit or action brought against IREL and hold IREL free and harmless against all costs of such claims or suits which may be made against IREL in respect of any infringement of any rights protected by patent, copyright, trademarks, and trade secrets to the extent that such claim, suit, or action is a result of the use of CONTRACTOR's technical Information for the construction, maintenance, and operation of PLANT and the use of CONTRACTOR's and/or any other process, licenser's processes used in PLANT. IREL shall pass on all claims made against it to CONTRACTOR for settlement.

8.2 CONTRACTOR declares that to the best of his knowledge and belief the use of CONTRACTOR's Technical Information for the construction, maintenance, and operation of PLANT and the use of CONTRACTOR's processes used in PLANT will not infringe any valid patent rights of a third party. However, if at any time such infringement arises, CONTRACTOR agrees to keep IREL indemnified and harmless against such claims and costs thereof and make arrangements that will allow IREL to continue the operation of PLANT.

8.3 IREL shall promptly advise CONTRACTOR in writing of any claim of infringement or any action for infringement of patents brought against it by a third party and based upon the use of CONTRACTOR's Technical Information. If such use is in accordance with instructions given in writing by CONTRACTOR, CONTRACTOR shall undertake the defence, or assist IREL in the defence, of the claim or suit up to final judgment or settlement.

8.4 CONTRACTOR shall undertake the defence on behalf of IREL and shall have sole charge and direction of the defence, and shall bear all costs related thereto. CONTRACTOR shall further hold IREL harmless from any damages or other sums that may become payable by IREL under a final judgment or settlement. However, IREL shall render to CONTRACTOR all reasonable assistance that may be required by CONTRACTOR in the defence, and shall have the right to be represented therein by advisory counsel of its own selection and at its own expense.

8.5 In addition to the measures specified in Clause-8.4, CONTRACTOR may further, at its option, however, in reasonable consultation with IREL, seek to abate the alleged infringement by

modification of PLANT or its operation without adversely affecting the performance and/or secure for IREL immunity from suit for infringement. In such case, CONTRACTOR shall bear/ reimburse IREL all costs related to the said modification and to the said immunity.

8.6 In the event that IREL is legally restrained from operating PLANT on account of any infringement action or suit, CONTRACTOR shall take all possible actions to assist IREL to operate and use PLANT, is so far his area of operation is concerned.

8.7 Neither CONTRACTOR nor IREL shall settle or compromise any suit or action without the written consent of the other, if settlement or compromise obliges the other to make any payment or part with any property or assume any obligations or surrender any rights or to be subjected to any injunction by reason of such settlement or compromise.

9.0 INDEMNITIES:

9.1 INDEMNIFICATION FOR LIABILITIES:

9.1.1 CONTRACTOR INDEMNIFICATION FOR LIABILITIES:

To the fullest extent permitted by Law, CONTRACTOR assumes liability for and agrees to indemnify, protect, save and hold harmless IREL from and against any and all Liabilities (including, any strict liability), arising out of acts or omissions of CONTRACTOR or its personnel or its agents in the performance of its obligations under the CONTRACT causing bodily injury, sickness, disease or death, damage to or loss of any property, and whether or not involving damage to WORKS or SITE that may be imposed on, suffered or incurred by or asserted against IREL and in any way relating to or arising out of

(i) WORK, any EQUIPMENT

(ii) the presence, discharge, treatment, storage, transportation, disposal, escape or release of any Hazardous Substance, or the threat thereof, at, to or from SITE after commencement of work (any hazardous substance already existing at SITE before commencement of WORK excluded)

(iii) The performance of WORK, or as a result of personal injuries (including wrongful death);

(iv) the violation by CONTRACTOR or any SUB-CONTRACTOR/ VENDOR of any Government Approval or applicable Law;

(v) Any breach of CONTRACT with any SUB-CONTRACTOR/VENDOR, provided, however, that CONTRACTOR shall not be required under this Clause to indemnify IREL for any liability arising out of or resulting from events or circumstances occurring or existing after PRELIMINARY ACCEPTANCE OF PLANT except where the liability arises from an act or omission of CONTRACTOR or any SUB-CONTRACTOR/VENDOR or any other Person directly or indirectly employed by either of them or anyone for whose acts either of them may be liable that was a contributory cause of such liability.

9.1.2 CONTRACTOR INDEMNIFICATION FOR TAXES:

It is specifically understood that CONTRACTOR hereby accepts and assumes exclusive liability for and save and hold IREL harmless from and against of all Taxes arising from the performance of WORK, and all such Taxes shall be deemed to be included in CONTRACT PRICE, except for GST. GST at applicable rate is payable extra. Seller need to prepare E-Invoice under GST and submit monthly/ quarterly GST Return as per GST Rules. Failure to submit GST Return on time as per GST Rules may result into deduction of GST while processing Bills.

9.1.3 INDEMNIFICATION BY SUB-CONTRACTOR/VENDOR:

CONTRACTOR shall obtain from each SUB-CONTRACTOR/VENDOR, which is an affiliate, and shall use all reasonable efforts to obtain from each SUB-CONTRACTOR/ VENDOR, an indemnification materially similar in form and substance to Clause-9.1.1 and Clause-9.1.2 of which the IREL shall be named as beneficiary.

9.1.4 PAYMENT OF AMOUNTS UNDER THIS CLAUSE:

Except to the extent covered by insurance, all amounts payable and due by CONTRACTOR to IREL under this Clause shall be deducted from CONTRACT PRICE or any other amounts owed by IREL to CONTRACTOR here under. If such amounts payable by IREL to CONTRACTOR are less

than the amounts payable and due by CONTRACTOR under this Clause, CONTRACTOR shall be liable to IREL for such excess and shall pay such amount to IREL immediately upon demand.

9.1.5 PERMITS AND CERTIFICATES:

CONTRACTOR shall procure, at its expense, all necessary permits, certificates and licenses required by virtue of all applicable laws, regulations, ordinances and other rules in force at the place where any of the works is to be performed, and CONTRACTOR further agrees to hold IREL harmless from liability or penalty which might be imposed by reason of any asserted or established violation of such laws, regulations, ordinances or other rule. IREL shall provide the necessary permits for CONTRACTOR's personnel to undertake any work in India in connection with CONTRACT.

9.1.6 MECHANICS LIEN:

CONTRACTOR agrees to indemnify and hold harmless IREL against all laborer's material, men's and/or mechanics liens arising from its work, and shall keep the premises of IREL free from all such claims, liens and encumbrances.

10.0 WORK TO BE TO THE SATISFACTION OF ENGINEER:

The Contractor shall execute, complete and maintain the Works in strict accordance with the contract, to the satisfaction of the Engineer and shall comply with and adhere strictly to the Engineer's instructions and direction on any matter (whether mentioned in the Contract or not). The Contractor shall take instructions and directions only from the Engineer or from the Engineer's representative on any matter touching or concerning the Works.

11.0 PROGRAMME TO BE FURNISHED:

As soon as practicable after the acceptance of his tender, the Contractor shall, if required, submit to the Engineer for his approval a programme showing the order of procedure and the method in which he proposes to carry out Works and shall whenever required by the Engineer or Engineer's representative furnish for his information particulars in writing of the Contractor's arrangement for the carrying out of the Works and of the constructional plant and temporary Works which the Contractor intends to supply, use or construct as the case may be. The submission to and approval by the Engineer or Engineer's representative of such programme or the furnishing of such particulars shall not relieve the Contractor of any of his duties or responsibilities under the Contract.

12.0 Contractors Superintendence:

The Contractor shall give and provide all necessary superintendence during the execution of the works and as long thereafter as the Engineer may consider necessary for the proper fulfilling of the Contractor's Obligation under the contract. The Contractor or one of his competent and authorized agent approved of in writing by the Engineer (which approval may at any time be withdrawn) is to be constantly on the Works and shall give his whole time to the superintendence of the same. If such approval shall be withdrawn by the Engineer, the Contractor shall as soon as is practicable (having regard to the requirement of replacing him as here-in-after mentioned) after receiving written notice of such withdrawal, remove the agent from the Site and shall not thereafter employ him again on the Site in any capacity and shall replace him by another agent approved by the Engineer, Such authorized agent shall receive on behalf of the Contractor directions and instructions from the Engineer or (subject to the limitations of Clause 2 hereof) the Engineer's representative.

13.0 CONTRACTOR'S EMPLOYEE:

The Contractor shall provide and employ on the Site in connection with execution and maintenance of the Works.

(a) Only such technical assistants and other staff as are skilled and experienced in their respective callings and such sub-agents, foreman and loading hands as are competent to give proper supervision to the work they are required to supervise and

(b) Such skilled, semi-skilled and unskilled labour as is necessary for the proper and timely execution and maintenance of the Works.

13.1 The Engineer shall be at liberty to object to and require the Contractor to remove forthwith from the Works any person employed by the Contractor in or about the execution or maintenance of the Works who in the opinion of the Engineer misconducts himself or incompetent or negligent in the proper performance of his duties or whose employment is other-wise considered by the Engineer to

be undesirable and such person shall not be again employed upon the Works without the written permission of the Engineer. Any person so removed from the Works shall be replaced without delay by a competent substitute approved by the Engineer.

14.0 EXTRA SUPERVISION ON WORK:

If in the opinion the Engineer, due progress is not made with the work in accordance with the contract, and or the execution thereof becomes contrary to specifications, and/or bad work is executed and/or bad materials are used or supplied by the Contractor, and/or any directions given by the Engineer are not properly complied with or attended to, the Engineer may if he considers it necessary or proper for the execution of the work in accordance with the contract, of which his certificate in writing will be sufficient evidence order the employment of extra supervising staff to supervise the work and the expenses of the employment including the salary of the supervising staff shall be provided by the Contractor, provided that the Engineer shall give to the Contractor not less than 7 days previous notice in writing of intention to exercise his power.

15.0 SETTING-OUT OF THE WORKS:

The Contractor shall be responsible for the true and proper setting out of the Works and the correctness of the position levels, dimensions and alignment of all parts of the Works and for the provision of all necessary instrument appliances and labour in connection therewith. If at any time during the progress of the works, any error shall appear or arise in the position, levels, dimensions or alignment of any part of the Works, the Contractor on being required so to do by the Engineer or Engineers representative shall at his own expense rectify such error to the satisfaction of the Engineer or Engineer's representative unless such error is based on incorrect data supplied in writing by the Engineer or the Engineer's representative in which case the expense of rectifying the same shall be borne by the Employer. The checking of any setting out or of any line or level by the Engineer or the Engineer's representative shall not in any way relieve the Contractor of his responsibility for the correctness thereof and the Contractor shall carefully protect and preserve all bench marks, site rails, pegs and other things used in setting out the works.

16.0 USE OF EXPLOSIVES:

Explosives shall not be used on the work by the contractor without the permission in writing of the Engineer and then only in the manner and to the extent to which he has prescribed. Where explosives are used, the same shall be stored in a special magazine to be provided by and at the cost of the Contractor, who shall be liable for all damages, loss or injury to any person or property & shall be responsible for complying with all the Statutory obligations in these respects.

17.0 CARE OF WORKS:

The Contractor shall in connection with the Works provide and maintain at his own cost all lights, guards, fencing and watching when and where necessary or required by the Engineer or Engineer’s representative or by a duly constituted authority for the protection of the Works or for the safety and convenience of the Public or others.

17.1 From the commencement to the completion of the Works, the Contractor shall take full responsibility or the care thereof and of all Temporary Works and in case any damage, loss or injury shall happen to the Works or to any part thereof or to any temporary Works from any cause whatsoever (save and except the excepted risks as defined in sub-clause (2) of the clause) shall at his own cost repair and make good the same so that at completion the Works shall be in good order and condition and in conformity in every respect with the requirements of the Contract and the Engineer's instructions. In the event of any such damage, loss or injury happening from any of the excepted risks the Contractor shall if and to the extent required by the contractor shall also be liable for any damage to the Works occasioned by him in the course of any operations carried out by him for the purpose of complying with his obligations under Clause 58 hereof.

17.2 **EXCEPTED RISKS :** The "excepted risks" mentioned in Sub-clause (1) above are war hostilities (whether war be declared or not), invasion act of foreign enemies, rebellion, revolution, insurrection of military or usurped power, civil war or (otherwise than among the Contractor’s own employees)

riot, commotion or disorder or any such operation of the forces of nature as responsible foresight and ability on the part of Contractor could not foresee or reasonably provide against (all of which are herein collectively referred to as "the excepted risks".)

18. USE OF LAND & BUILDINGS

(a) Wherever any land or building belonging to IREL is allotted to the Contractor, the Contractor shall return vacant possession of the same land/building in good condition to IREL after the completion of works as soon as the contract is over/terminated, failing which IREL would be entitled to withhold the payment of the security deposit and/or final bill in addition to any other action which the IREL may like to take for getting the vacant possession of the land or building as aforesaid.

(b) The Contractor should obtain the prior approval of the competent authority for construction of purely temporary shed. The Contractor should submit written application accompanied by layout plan for construction of such temporary shed. Any modification/alteration if deemed necessary thereafter, should be done with prior approval of the competent authority.

(c) The Contractor shall have to pay licence fee for the area occupied as per rates fixed by the Management of IREL from time to time.

(d) The permission for such temporary shed will be accorded only for the purpose of work as awarded to such Contractor and the temporary shed so constructed should be dismantled within 15 days from the date of completion of the maintenance work and restore the possession of vacant land in the original condition or in a condition acceptable to the Management of IREL. In case of any difficulty, the Contractor may obtain specific approval of the competent authority which may not be extended more than a period of one month in any case.

In case of failure of the Contractor to dismantle the temporary shed and hand over the vacant possession of the premises, the department shall be compelled to dismantle the temporary shed so constructed at the risk and cost of the contractor without prejudice to any other action which may be taken including recovery of damages as per rates fixed by IREL for the unauthorized occupation of the shed/ premises beyond the permitted period.

(e) The Contractor should use such premises/shed for such purpose incidental to such awarded work and not as otherwise. It shall be the liability of the contractor to ensure that this occupation of the premises/shed does not provide to be of nuisance to the residents in the vicinity. The Contractor shall also not sublet the premises to any other party.

19. DAMAGES TO PERSONS AND PROPERTY:

19.1 The Contractor shall (except if and so far as the Specification provided otherwise) indemnify and keep indemnified the IREL against all losses and claims for injuries or damages to any person or any property whatsoever which may arise out of or in consequence of the construction and maintenance of the works and against all claims, demands, proceedings, damages, costs charges and expenses whatsoever in respect of or in relation thereto. Provided always that nothing hereby contained shall be deemed to render the Contractor liable for or in respect of or to indemnify the IREL against any compensation or damages for or with respect to:

(a) The permanent use or occupation of land by the works or any part thereof (save as herein - after provided) surface or other damage as aforesaid i.e. surface or other damage caused by contract works in the normal course.

(b) The right of the IREL to construct the Works or any part thereof on over under in or through any land.

(c) Interference whether temporary or permanent with any right to light, air, way or water or other easement or quasi-easement which is unavoidable result of the construction of the Works in accordance with the Contract.

Provided further that for the purposes of this clause, the expression "the land" shall be deemed to be limited to the area defined in the specification as shown on the drawings in which land crops, trees and structures will be disturbed or damaged as an inevitable consequence of the carrying out of the Works.

20.0 ACCIDENT OR INJURY TO WORKMEN:

(a) The employer shall not be liable for or in respect of any damages or compensation payable as per or otherwise in respect of or in consequence of any accident or injury to any workmen

or other persons in the employment of the Contractor or any Sub-Contractor and the Contractor shall indemnify and keep indemnified the Employer against all such damages and compensation and against all claims, demands, proceedings, cost, charges and expenses whatsoever in respect thereof in relation there to.

(b) The Contractor shall forthwith report all accidents and injuries as a result of his contractual work to the employer or his representative.

21.0 WORKMEN'S COMPENSATION ACT:

The Contractor shall at all times indemnify the Employer against all claims for compensation under the provision of the Workmen's Compensation Act, 1923 (VIII of 1923) or any other law for the time being in force by or in respect of any workmen employed by the Contractor in carrying out the contract and against all costs and expenses incurred by the employer in connection therewith and (without prejudice to any other means of recovery) the employer shall be entitled to deduct from any money due or to become due to the Contractor (whether under this contract or any other contract) all moneys paid or payable by the Employer by way of compensation aforesaid or for costs or expenses in connection with any claim thereto and the Contractor shall abide by the decision of the Employer as to the sum payable by the Contract, under the provision of this clause.

22.0 GIVING OF NOTICE AND PAYMENT OF FEES:

22.1 The Contractor shall give, all notices and pay all fees required to be given or paid to any Central or State, Statute, Ordinance or other Law or any rule, Regulation or Bye-Law of local or other duly constituted authority in relation to the execution of the Works or of any temporary works and by the rules and regulations of all public bodies whose property or rights are affected or may be affected in any way by the works or any Temporary Works.

22.2 COMPLIANCE WITH STATUTES REGULATIONS ETC.:

The Contractor shall conform in all respects with the provision of any such statute, ordinance, or Law as aforesaid and the rules, Regulations or Bye-laws of any local or other duly constituted authority which may be applicable to the Works or to any Temporary Works and with such rules and regulations of public bodies as aforesaid and shall keep the employer indemnify against all penalties and liability of every kind for breach of any such Statute, Ordinance, Law, Rules, Regulation or Bye-laws.

23. FOSSILS ETC.:

All fossils, coins, articles, value of antiquity and structures and other remains or things of geological or archaeological interest discovered on the site of the works shall as between the employer and the Contractor be deemed to be the absolute property of the Employer and the Contractor shall take reasonable precautions to prevent, his workmen or any other persons from removing or damaging any such article or thing and shall immediately upon discovery thereof and before removal acquaint the Engineers representative of such discovery and carry out at the expense of the employer the engineer's Representative's orders as to the disposal, removal or otherwise of the same.

24.(a) PATENT RIGHTS & ROYALTIES:

The Contractor shall save harmless and indemnify the Employer from and against all claims and proceeding for or on account of infrinCPPent of any patent rights, designs trade-mark or name or other protected rights in respect of any Constructional plant, machine, work or material used for or in connection with the Works or Temporary Works of any of them and from and against all claims, demands, proceeding, damages, cost, charges and expenses whatsoever in respect thereof or in relation there to.

(b) Except where otherwise specified, the Contractor shall pay all tollage and other royalties, rent and other payments or compensation (if any) for getting stone, sand, gravel, clay or other materials required for the Works or temporary Works or any of them.

25 INTERFERENCE WITH TRAFFIC ADJOINING PROPERTIES.

All operations necessary for the execution of the Works and for the construction of any Temporary works shall so far as compliance with the requirements of the Contract permits be carried on so as not to interfere unnecessarily or improperly with the Public convenience or the access to use and occupation of public or private roads and footpaths or to or properties whether in the possession of the Employer’s Workmen or of any other person and Contractor shall save harmless and indemnify

employer in respect of all claims, demands, proceeding, damages, costs, charges and expenses whatsoever arising out of or in relation to any such matters.

26.(a) EXTRAORDINARY TRAFFIC:

The Contractor shall use every reasonable means to prevent any of the highways and bridges communicating with or on the routes to the site from being damaged or injured by any traffic of the Contractor or any of his Sub-Contractors and in particular shall select routes, choose and use vehicles and restrict and distribute loads so that any such extraordinary traffic as will inevitably arise from the moving of plant and material from and to the site shall be limited as far as reasonably possible and so that no unnecessary damage or injury may be occasioned to such highways and bridges. For any damage caused by the breach hereof, the Contractor shall be solely responsible.

(b) WATERBORNE TRAFFIC:

Where the nature of the works is such as to require the use by the Contractor of water borne transport, the fore going provisions of this clause shall be construed as though "highway" included a dock, deck, sea wall, or other structure related to a water-way and "vehicles" included craft and shall have effect accordingly.

27. OPPORTUNITIES FOR OTHER CONTRACTORS:

The Contractor shall in accordance with the requirements of the Engineer afford all reasonable opportunities for carrying out their work to any other contractors employed by the Employer and their workmen and to the workmen of the Employer and of any other duly constituted authorities who may be employed in the execution on or near the site of any work not included in the Contract or of any Contract which the Employer may enter into in connection with or ancillary to the works.

28. SUPPLY OF PLANT, MATERIAL AND LABOUR:

Except where otherwise specified the Contractor shall at his own expense supply and provide all the Constructional Plant, Temporary Works, materials both for temporary and for permanent Works, labour (including the supervision thereof), transport to or from the Site and in and about the Works and other things of every kind required for the constructions, completion and maintenance of the Works.

29. DELAY IN OBTAINING MATERIALS BY THE EMPLOYER:

If the Employer has undertaken to supply materials specified in the special conditions at rates stated therein, the Contractor shall keep himself in touch with the day-to-day position regarding the supply of materials from the Engineer and so adjust the progress of the work that their labour may not remain idle nor may there be any other claim due to or arising from delay if any, in obtaining the materials. It should be clearly understood that no claim whatsoever shall be entertained by the Employer on account of delay in supplying materials.

30. SITE CLEARANCE ON COMPLETION OF WORK:

On the completion of the work all rubbish, debris, vats tanks, materials, and temporary structures of any sort or kind used for the purpose of or connected with its construction are to be removed by the Contractor and all pits and excavations filled up and the site handed over in a tidy and workman like condition and no final payment in settlement of the account for the said work shall be held to be due or shall be made to the Contractor, till such site clearance shall have been effected by him, and such clearance may be made by the Engineer, at the expense of the Contractor in the event of his failure to comply with this provision within 7 days after receiving notice in writing from the Engineer to that effect. If it becomes necessary for the Engineer to have the site cleared as indicated above at the expense of the Contractor, the Employer shall under no circumstances, be held liable for any losses or damages to such of Contractor's property as may be on such site due to such removal there from which removal may be effected by means of public sale of such materials and property or in such way as seems fit and most convenient to the Engineer.

31. RETURN OF SURPLUS MATERIALS:

Notwithstanding anything contained to the contrary anywhere in this contract, wherever any materials for the execution of the contract are procured with the assistance of the Employer either by issue from Employer's stocks or purchase made under orders or permits or licenses issued by

the Employer, the Contractor shall use the said materials economically and solely for the purpose of the contract and not dispose of them without the permission of the Employer, and if required by the Engineer shall return to the Employer all surplus or unserviceable materials that may be left with the Contractor after the completion of the contract or at its termination, for any reason whatsoever on being paid or credited such price as the Engineer shall determine, having due regard to initial cost and the condition of the materials at the time of such return thereof. The price to be allowed to the Contractor, however, shall not exceed the amount charged to him excluding the storage charge if any. The decision of the Engineer shall be final and conclusive. In the event of breach of the aforesaid condition, the Contractor shall in addition to making himself liable of action for contravention of the terms of the licences or permit and/or for criminal breach of trust) be liable to the Employer for payment of all moneys, advantages or profit resulting or which in the usual course would have resulted to him by reason of such breach.

WORK MATERIAL AND PLANT

32. QUALITY OF MATERIAL & WORKMANSHIP AND TESTS:

All materials and workmanship shall be of the respective kinds described in the Contract and in accordance with the Engineer's instructions and shall be subjected from time to time to such tests as the Engineer may direct at the place of manufacture or fabrication or on the Site or at all or any of such places. The Contractor shall provide such assistance, instruments, machines, labour and materials as are normally required for examining, measuring and testing any work and the quality, quantity or weight of any material used and shall supply samples of materials before incorporation in the Works for testing as may be selected and required by the Engineer.

Cost of samples: All samples shall be supplied by the Contractor at his cost.

Cost of tests : The cost of making any test in performance of his works shall be borne by the Contractor.

Cost of tests not provided for:

If any test is ordered by the Engineer which is either,

a. not so intended or provided or

b. is not so particularised for or

c. though so intended or provided for is ordered by the Engineer to be carried by an independent person at any place other than the Site or the place of manufacture or fabrication of the materials tested. Then the cost of such test shall be borne by the Contractor if the test shows the workmanship of materials not to be in accordance with the provisions of the Contract or the Engineer's instructions but otherwise by the Employer.

33. ACCESS TO SITE:

The Employer/Engineer and any person authorised by him shall at all times have access to the Works and to the Site and to all workshops and places where work is being prepared or where materials, manufactured articles or machinery are being obtained for the Works and the Contractor shall afford every facility for and every assistance in or in obtaining the right to such access.

34. INSPECTION, TESTING AND EXPEDITING:

34.1 The EMPLOYER or his representatives shall have their right to inspect and/or to test the goods to conform to the specifications laid down in the CONTRACT. The SPECIAL CONDITIONS OF CONTRACT and/ or the TECHNICAL SPECIFICATIONS shall specify what inspections and test the EMPLOYER requires and where they are to be conducted. The EMPLOYER shall notify the CONTRACTOR in writing of the identity of any other representatives retained for this purpose. Expediting by EMPLOYER's representative in no way relieves the CONTRACTOR of his obligation under the terms and conditions of this CONTRACT.

34.2 The inspections and tests may be conducted on the premises of the CONTRACTOR or his SUB-CONTRACTOR at point of completion and/or at the good's final destination. When conducted on

the premises of the CONTRACTOR or his SUB-CONTRACTOR, all reasonable facilities and assistances including access to drawings and production data shall be furnished to the inspector at no charge to the EMPLOYER.

34.3 CONTRACTOR shall be held responsible for any possible delay in the approval or testing phase as well as for any possible delay in the remittance of necessary certificates. Delay on the part of the Inspection institutions will not be considered a case of 'Force Majeure'.

34.4 Participation or presence of EMPLOYER or their representatives at any tests or their failure to be present at or to witness any tests to be undertaken pursuant here to shall not in any way or manner relieve or release the CONTRACTOR from any of its warranties, guarantees or other obligations under the CONTRACT.

34.5 Copies of all test results/report of the tests shall be furnished promptly by the CONTRACTOR to EMPLOYER.

35.1 EXAMINATION OF WORK BEFORE COVERING UP:

No work shall be covered up or put out of view without the approval of the Engineer or the Engineer's representative and the Contractor shall afford full opportunity for the Engineer or the Engineer's representative to examine and measure any work which is about to be covered up or put out of view and to examine foundations before permanent work is over, any such work or foundations is or are ready or about to be ready for examination and the Engineer's representative shall without unreasonable delay unless he considers it unnecessary and advises the Contractor accordingly attend for the purpose of examining and measuring such work or of examining such foundations.

35.2 UNCOVERING & MAKING OPENINGS:

The Contractor shall uncover any part or parts of the Works or make opening in or through same as the Engineer may from time to time direct and shall reinstate and make good such part or parts to the satisfaction of the Engineer. If any such part or parts have been covered up or put out of view after compliance with the requirements of subclause(l) of this Clause and are found to be executed in accordance with the Contract, the expenses of uncovering making opening in or through reinstating and making good the same shall be borne by the Employer but in any other case all such expenses shall be borne by the Contractor and shall be recoverable from him by the Employer or may be deducted by the Employer from any moneys due or which may become due to the Contractor.

36. REMOVAL OF IMPROPER WORK & MATERIALS:

The Engineer shall during the progress of the Works have power to order in writing from time to time:

(a) the removal from the Site within such time or times as may be specified in the order of any materials which in the opinion of the Engineer are not in accordance with the contract,

(b) the substitution of proper and suitable materials and

(c) the removal and proper re-execution (not withstanding any previous test there of or interim payment there for) of any work which in respect of materials of workmanship is not in the opinion of the Engineer in accordance with the contract.

37. DEFAULT OF CONTRACTOR IN COMPLIANCE:

In case of default on the part of the Contractor in carrying out such order, the employer shall be entitled to employ and pay other persons to carry out the same and all expenses consequent thereon or incidental thereto shall be borne by the Contractor and shall be recoverable from him by the Employer or may be deducted by the Employer from any moneys due or which may become due to the Contractor.

38. SUSPENSION OF WORK:

The Contractor shall on the written order of the Engineer suspend the progress of the works or any part thereof for such time or times and in such manner as the Engineer may consider necessary and shall during such suspension properly protect and secure the work so far as is necessary in the opinion of Engineer. Provided that the Contractor shall not be entitled to recover any such extra cost unless he gives notice in writing of his intention to claim to the Engineer within 28 days of the Engineer's order. The Engineer shall settle and determine the extra payment to be made to the Contractor in respect of such claim as the Engineer shall consider reasonable.

39. SUSPENSION LASTING MORE THAN 90 DAYS:

If the progress of the works or any part thereof is suspended on the written order of the Engineer for more than 90 days, the Contractor may serve a written notice on the Engineer requiring permission within 28 days from the receipt thereof to proceed with the works or that part thereof in regard to which progress is suspended and if such permission is not granted within that time the Contractor by a further written notice so served may (but is not bound to) elect to treat the suspension where it affects part only of the Works as an omission of such part under Clause 62 thereof or where it affects the whole Works as an abandonment of the Contract by the Employer.

40. ISSUE OF OTHER MATERIALS FROM IREL STORES:

(i) Use of additional items:

If the Engineer directs the use of additional items of IREL stores in the work, the Contractor is bound to comply with such directions. The recovery rate for such stores shall be fixed by the Engineer.

(ii) Recovery Rates:

In addition to the above, other materials from IREL stores can be supplied subject to availability if the Engineer is satisfied as to the necessity for such issues. Recovery rates for the materials so issued shall be IREL issue rates plus 12% plus GST as may be in force from time to time.

(iii) Handling Conveyance etc:

All handling, conveyance, etc. from place of issue to the worksite of the Contractor are to be borne by the Contractor and the rates quoted in the Tender Schedule cover these.

(iv) Proper accounting:

AII materials issued to the Contractor whether free of cost or on cost recoverable basis shall be properly accounted for. Any loss or damage to the stores issued by IREL will be debited to the Contractor at the IREL issue rates plus 20% plus GST as may be in force from time to time.

(vi) Excess/misuse:

Steel drawn in excess or misused will be charged at 100% overissue/recovery rates as stipulated in the contract.

(vii) Surplus stock:

No claim will be entertained for non-supply or delay in supply of any or all the above stores.

(viii) Except Steel, materials issued to the Contractor on recovery basis shall not normally be taken back. In case of steel and materials issued free, the surplus stock will be taken back at the stipulated rates of issue, provided they are returned in good condition. In case of steel, rebate at full rates will be made only if the pieces are returned in length not less than 6M. Shorter pieces in the range of 4M to 6M length will be taken back @ 50% of the issue rates. The materials shall be returned at IREL stores and all expenses towards conveyance, handling, weighing, sorting, etc. shall be at Contractor's accounts. As regards to the conditions of the materials to be returned, the decision of the Engineer shall be final and binding on the Contractor. The norms prevalent for consumption in respect of Steel shall apply for calculating the consumption of these materials for recovery.

COMMENCEMENT TIME AND DELAYS

41. COMMENCEMENT OF WORK:

The Contractor shall commence the works on site within the period as mentioned in the contract and shall proceed with the same with due expedition and without delay.

42. WAY LEAVES ETC.:

The Contractor shall bear all expenses and charges for special or temporary way leaves required by him in connection with access to the Site. The Contractor shall also provide at his own cost any additional accommodation outside the Site required by him for the purposes of the works, except when otherwise specifically agreed and provided for.

43. TIME FOR COMPLETION:

Subject to any requirement in the Contract as to completion of any portion of the works before completion of the whole of the works, it shall be completed within the time stated in the LOI/Award Letter/Agreement.

44. EXTENSION OF TIME FOR COMPLETION:

Should the amount of extra or additional work of any kind or other special circumstances of any kind whatsoever which may occur be such as fairly to entitle the contractor to an extension of time for the completion of the work, the Engineer shall determine the amount of such extension. Provided that the Engineer as not bound to take in to account any extra or additional work or other special circumstances unless the Contractor has within 14 days after such work has been commenced on such circumstances have arisen or as soon thereafter as is practicable, delivered to the Engineer's representative full and detailed particulars of any claim to extension of time to which he may consider himself entitled in order that such claim may be investigated at the time.

44.1 TIME EXTENSION OF CONTRACT:

The CONTRACTOR shall promptly notify the ENGINEER-IN-CHARGE any event or conditions which might delay the completion of work in accordance with the approved schedule and the steps being taken to remedy such situation.

44.2 If the Work is delayed at any time in the commencement or during the progress of the WORK by any act, delay or neglect solely attributable to IREL or his employees, or by any other contractor utilised by the IREL or by FORCE MAJEURE conditions, the time of completion shall be extended by IREL (without levy of Mutually Agreed Damages) in writing for a reasonable period as may be mutually agreed upon, at the time of closure of contract. The CONTRACTOR shall, immediately on occurrence of such special circumstances but not later than 14 working days, bring to the knowledge of IREL through written application for any such delay as mentioned above.

44.3 IREL shall have the right to suspend the WORK in whole or in part for such time as may be necessary in order that WORKS shall be well and properly executed. In such events, suitable extension of time shall be granted to CONTRACTOR.

45. NO NIGHT OR SUNDAY WORK:

Subject to any provision to the contrary contained in the contract, none of the permanent work shall save as hereinafter provided be carried on during the night or on Sundays (if locally recognised as days of rest) or their locally recognised equivalent without the permission in writing of the Engineer's representative save when the work is unavoidable or absolutely necessary for the saving of life or property or for the safety of the Works in which case the Contractor shall immediately advise the Engineer's representative. Provided always that the provisions of this Clause shall not be applicable in the-case of any work which it is customary to carry out by rotary or double shifts.

46. RATE OF PROGRESS:

The whole of the materials, plant and labour to be provided by the Contractor and the mode, manner and speed of execution and maintenance of the work are to be of a kind and conducted in a manner to the satisfaction of the Engineer. Should the rate of progress of the works or any part

thereof be at any time in the opinion of the Engineer too slow to ensure the completion of the works by the prescribed time or extended time for completion the Engineer shall so notify the Contractor in writing and the Contractor shall thereupon take such steps as the contractor may think necessary and the Engineer may approve to expedite progress so as to complete the works by the prescribed time or extended time for completion. If the work is not being carried on by day and by night and the Contractor shall request permission to work by night as well as by then if the Engineer shall grant such permission, the Contractor shall not be entitled to any additional payment for so doing but if such permission shall be refused and there shall be no equivalent practicable method of expediting the progress of the work, the time for completion shall be extended by such period as is solely attributable to such refusal. All work at night shall be carried out without unreasonable noise and disturbance. The Contractor shall indemnify the Employer from and against any liability for damages on account of noise or other disturbance created while or in carrying out the work and from and against all claims, demands, proceedings, costs, charges and expenses whatsoever in regard or in relation to such liability.

47. LIQUIDATED DAMGES FOR DELAYED EXECUTION OF CONTRACT:

Subject to Article -48, if the CONTRACTOR fails to deliver any or all of the GOODS or performance of the services within the time period(s) specified in the CONTRACT, the EMPLOYER shall, without prejudice to his other remedies under the CONTRACT, levy Liquidated damages from the CONTRACT PRICE, a sum calculated on the basis of the CONTRACT PRICE, including subsequent modifications.

Deductions shall apply as per following formula:

For repair works costing up to Rs. Ten lakhs (Rs 10,00,000/-) : One percent (1%) of the contract value per week subject to a maximum of ten percent (10%) of contract value

For all other works :

Half percent (0.5%) of the contract value per week of delay subject to a maximum of ten percent (10%) of contract value.

47.1 EMPLOYER may deduct the amount so payable by CONTRACTOR, from any amount falling due to the CONTRACTOR or by recovery against the Performance Guarantee. Both CONTRACTOR and EMPLOYER agree that the above percentages of price reduction are genuine pre-estimates of the loss/damage which the EMPLOYER would have suffered on account of delay/breach on the part of the CONTRACTOR and the said amount will be payable on demand without there being any proof of the actual loss/or damage caused by such breach/delay. A decision of the EMPLOYER in the matter of applicability of price reduction shall be final and binding.

48. FORCE MAJEURE:

48.1 Force majeure is an event beyond the control of contractor and not involving the contractor's fault or negligence and which is not foreseeable. Such events may include, but are not restricted to acts of the purchaser/contractor either in its sovereign or contractual capacity, wars or revolution, hostility, acts of public enemy, civil commotion, floods, explosions, epidemics, quarantine restrictions, strikes, lockouts and freight embargoes or any other event which IREL may deem fit to consider so. The decision about force majeure shall rest with IREL which shall be final and binding.

48.2 If there is delay in performance or other failures by the contractor to perform obligations under its contract due to event of a Force Majeure, the supplier/contractor shall not be held responsible for such delays/failures.

48.3 If a Force Majeure situation arises, the contractor shall promptly notify the purchaser in writing of such conditions and the cause thereof within fifteen days of occurrence of such event. Unless otherwise directed by the EMPLOYER in writing, the CONTRACTOR shall continue to perform its obligations under the contract as far as reasonable/practical and shall seek all reasonable alternative means for performance not prevented by the Force Majeure event.

48.4 If the performance in whole or in part or any obligation under this contract is prevented or delayed by any reason of Force Majeure for a period of exceeding 120 days, IREL may at its option terminate the contract without any financial repercussion on either side.

49. CERTIFICATE OF COMPLETION OF WORK:

As soon as in the opinion of the Engineer the works shall have been substantially completed and shall have satisfactorily passed any final test that may be prescribed by the Contract, the Engineer shall on receiving a written undertaking by the Contractor to finish any outstanding work during the period of Maintenance issue a Certificate of completion in respect of the works and the Period of Maintenance of the works shall commence from the date of such certificate. Provided that the Engineer may give such a certificate with respect to any part of the works before the completion of the whole of the work and shall upon the written application of the contractor give such certificate with respect to any substantial part of the works, which has been both completed to the satisfaction of the Engineer and occupied or used by the employer and when any such certificate is given in respect of a part of the works such part shall be considered as completed and the Period of Maintenance of such part shall commence from the date of such certificate. Provided also that a Certificate of Completion given in accordance with the foregoing provision of any part of the works occupied and use as aforesaid shall not be deemed to certify completion of any round or surfaces requiring reinstatement unless such certificate shall expressly so state.

50. MAINTENANCE AND DEFECTS:

50.1 DEFINITION OF PERIOD OF MAINTENANCE:

In these conditions, the expression "Period of Maintenance" shall be either 12 (Twelve) months or any other period if specifically specified in the special conditions of this contract, and calculated from the date of completion of the works certified by the Engineer in accordance with Clause 49 hereof or in the event of more than one certificate having been issued by the Engineer Under the said Clause from the respective dates so certified and in relation to the Period of maintenance, the expression “the works” shall be construed accordingly.

50.2 EXECUTION OF WORKS OF REPAIR ETC.:

To the intent that the works shall at or as soon as practicable after the expiration of the period of Maintenance be delivered up to the Employer in as good and perfect a condition (fair wear and tear expected) to the satisfaction of the Engineer as that in which they were at commencement of the Period of Maintenance, contractor shall execute all such work of repair, amendment, reconstruction, rectification and making good of defects, imperfections, shrinkages or other faults as may be required of the Contractor in writing by the Engineer during the Period of Maintenance or within fourteen days after its expiration as a result of an inspection made by or on behalf of the Engineer prior to its expiration.

50.3 COST OF EXECUTION OF WORKS OF REPAIR ETC.:

All such work shall be carried out by the Contractor at his own expense if the necessity thereof shall in the opinion of the Engineer be due to the use of materials or workmanship not in accordance with the Contract or to neglect or failure on the part of the Contractor to comply with any obligation expressed or implied on the Contractor’s part under the

Contract. If in the opinion of the Engineer such necessity shall be due to any other cause, the value of such work shall be ascertained and paid for as if it was an additional work.

50.4 REMEDY ON CONTRACTOR'S FAILURE TO CARRY OUT:

If the Contractor shall fail to do any such work as aforesaid required by the Engineer, the Employer shall be entitled to carry out such work by his own workmen or by other Contractors, and if such work is the work which the Contractor should have carried out at his own cost, Employer shall be entitled to recover from the Contractor the cost thereof or may deduct the same from any moneys due or that may become due to the Contractor.

51. CONTRACTOR TO SEARCH:

The Contractor shall if required by the Engineer in writing search or the cause of any defect in perfection or fault under the directions of the Engineer. Unless such defect, imperfection or fault shall be one for which the Contractor is liable under the contract, the cost of the work carried out by the Contractor in searching as aforesaid shall be borne by the Employer. But if such defect, imperfection or fault shall be one for which the Contractor is liable as aforesaid the cost of the work

carried out in searching as aforesaid shall be borne by the Contractor and he shall in such case repair, rectify and make good such defect, imperfection or fault at his own expense in accordance with the provisions of Clause 50 hereof.

52. ALTERATIONS, ADDITIONS AND OMISSIONS:

52.1 VARIATIONS

The Engineer shall make any variation from quality or quantity of the works or any part there of that may in his opinion be necessary and for that purpose or if for any other reason it shall in his opinion be desirable he have power to order the Contractor to do and the Contractor shall do any of the following:

(a) increase or decrease the quantity of any works included in the contract.

(b) omit any such work

(c) change the character or quality or kind of any such work

(d) change the levels, lines position and dimensions of any part of works and

(e) execute additional work of any kind necessary for the completion of the works and no such variation in any way vitiate or invalidate the contract but the value (if any) of all such variations shall be taken into account in ascertaining the amount of the contract price.

52.2 No such variation shall be made by the Contractor without an order in writing of the Engineer. Provided that no order in writing shall be required for increase or decrease in the quantity of any work where such increase or decrease is not the result of an order given under this Clause but is the result of the quantities exceeding or being less than those stated in the Tender Schedule. Provided also that if for any reason the Engineer shall consider it desirable to give any such order verbally, the contractor shall comply with such order and any confirmation in writing of such verbal order given by the Engineer whether before or after the carrying out of the order shall be deemed to be an order in writing within the meaning of this clause.

53.1 VALUATION OF VARIATIONS:

The 'Engineer shall determine the amount (if any) to be added to or deducted from the sum named in the Tender in respect of any extra or additional work done or work omitted by his order. All such work shall be valued at the rates set out in the Contract, if in the opinion of the Engineer the same shall be applicable. If the Contract shall not contain any rates applicable to the extra or additional work then reasonable prices shall be fixed by the Engineer.

53.2 POWER OF ENGINEER TO FIX RATES:

Provided that if the nature of amount of any omission or addition relative to the nature or amount of the whole of the contract work or to any part thereof shall be such that in the opinion of the Engineer the rate or price contained in the contract for any item of the work is by reason of such omission or additions rendered unreasonable or inapplicable, the Engineer shall fix such other rate or price as in the circumstances he shall think reasonable and proper.

Provided also that no increase of the Contract Price under sub-clause (1) of this clause on variation of rate or price under sub-clause (2) of this clause shall be made unless as soon after that date of the order as is practicable and in the case of extra or additional work before the commencement of the work or as soon thereafter as is practicable notice shall have been given in writing.

(a) by the Contractor to the Engineer of his intention to claim extra payment or a varied rate or.

(b) by the Engineer to the Contractor of his intention to vary a rate or price as the case may be.

53.3 CLAIMS:

The Contractor shall send to the Engineer's representative once in every month an account giving particulars (as full and detailed as possible) of all claims for any additional expenses to which the Contractor may consider himself entitled and of all extra or additional work ordered by the Engineer which he has executed during the preceding month and no claim for payment for any such work will be considered which has not been included in such particulars. Provided always that the Engineer, shall be entitled to authorise payment to be made for any such work notwithstanding the

Contractor's failure to comply with this condition, if the contractor has at the earliest practicable opportunity notified the Engineer that he intends to make a claim for such work.

53.4 EXTRA ITEM:

Any extra item arising during the execution of work due to any reason shall be paid for based on the sanctioned schedule of rates or rates derived therefrom. The percentage quoted by the tenderer shall be applied to the rate arrived at from the schedule of rates or rates derived therefrom. In case the rates cannot be derived from the Schedule of rates or the quoted rates, CPWD norms shall be followed for determination of rates. Analysis of rates on the basis of field observations shall be considered if schedule of rates/CPWD norms are not available. The rates given in the schedule are complete for labour and materials including all leads, lifts, royalty etc. except otherwise stated in the items. No extra claim on account of these item shall be entertained.

54. PROPERTY IN MATERIALS:

54.1 If the specification or estimate of the work provides for use of any special description of materials to be supplied from the Engineer's store, or if it is required that the Contractor shall use certain stores to be provided by the Engineer (such materials and stores, and Plants and the prices to be charged therefore, as here-in-after mentioned being so far as practicable for the convenience of the Contractor but not so as in any way to control the meaning or effect of this contract specified in the schedule or memorandum hereto annexed), the Contractor shall be supplied with such materials and stores as required from time to time to be used by him for the purposes of the contract only, this being calculated out from specifications, drawing etc. and the value of the full quantity of materials and stores so supplied at the rates specified in the said schedule or memorandum may be set off or deducted from any sums then due, or thereafter to become due to the Contractor under the contract, or otherwise, or against or from the security deposit or the proceeds of sale there of if the same is held in Government securities, the same or a sufficient portion there of being in this case to fulfil the purpose. All materials supplied to the Contractor shall remain in the absolute property of Employer and shall not on any account

be removed from the site of the work and shall at all times be open to inspection by the Engineer.

Any such materials unused and in perfectly good condition at the time of the completion of determination of the contract shall be returned to the Engineer store. If by a notice in writing under his hand he shall so require but the Contractor shall not be entitled to return any such materials unless with such consent and shall have no claim for compensation on account of any such materials so supplied to him as aforesaid during being unused by him or for any wastage in or damages to any such materials.

54.2 MATERIALS OBTAINED FROM DISMANTLEMENT & EXCAVATION ETC:

Contractors in the course of their works, should understand that all material (e.g. store and other materials obtained in the work of dismantling, excavation, etc. will be considered Employer's property) and issued to the Contractor (if they require the same for their own use) at rates approved by him. If these materials are not required by them they will be disposed off to the best advantage of Employer.

54.3 **RELICS, GOLD, SILVER FOUND IN OR UPON THE SITE :** All gold, silver, oil and other minerals of any description and precious stones, coins, treasures, relics, antiquities and other similar things which shall be found in or upon the site shall be the property of the Employer, and the Contractor shall duly preserve the same to the satisfaction of Employer and shall, from time to time deliver the same to such person or persons as the Employer may appoint to receive the same.

55. NO APPROVAL BY VESTING:

The operation of the Clause numbered 62 shall not be deemed to imply any approval by the Engineer of the materials or other matters referred to therein nor shall it prevent the rejection of any such materials at any time by the Engineer.

MEASUREMENT

56. QUANTITIES:

The quantities set out in the Tender Schedule are the approximate estimated quantities of the work but they are not to be taken as the actual and correct quantities of the works to be executed by the

Contractor in fulfilment of his obligations under the Contract. Any item may be omitted or altered and no claim for compensation will be entertained on this account or for any variation however substantial it may be in the Tender Schedule.

57. WORKS TO BE MEASURED:

The Engineer shall except as otherwise stated ascertain and determine by measurement the value in accordance with the Contract of work done in accordance with the contract. He shall when he requires any part or parts of the Works to be measured give notice to the Contractor's authorised agent or representative who shall forthwith attend or send a qualified agent to assist the Engineer or the Engineer's representative in making such measurement and shall furnish all particulars required by either of them. Should the Contractor not attend or neglect or omit to send such agent then the measurement made by the Engineer or approved by him shall be taken to be the correct measurement of the work. For the purpose of measuring such permanent work as is to be measured by record drawings, the Engineer's representative shall prepare record drawing month by month of such work and the Contractor as and when called upon to do so in writing shall within 14 days attend to examine and agree such record drawings, with the Engineer's representative and shall sign the same when so agreed and if the Contractor does not so attend to examine and agree any such record drawings they shall be taken to be correct. If after examination of such record drawings the Contractor does not agree the same or does not sign the same as agreed, they shall nevertheless be taken to be correct unless the Contractor shall within 14 days of such examination lodge with the Engineer's representative for decision by the Engineer's notice in writing of the respects in which such record drawings are claimed by him to be incorrect. The Contractor shall be paid for the quantities resulting from measurement of the executed work.

58. MODE OF MEASUREMENT FOR CIVIL WORKS:

The mode of measurement shall be as per Indian Standard 1200 latest, subject to the following:

(a) In case the mode of measurement is not covered by the said Indian Standard for a particular item, the method of measurement shall be as per CPWD specifications for that item only.

(b) Wherever a particular mode of measurement is specified in the description of the item in the tender schedule/special conditions, the same shall only apply.

(c) In case of dispute regarding mode of measurement, the decision of the Engineer shall be final and binding on the Contractor.

59. PAYMENT FOR WORK DONE

59.1.1 100% payment against bills for the work done (Subject to the required deductions) shall be made to the Contractor based on detailed measurements and certification of bills by the Engineer.

59.1.2 **ON ACCOUNT PAYMENT:** Bills shall be prepared and submitted by the Contractor. Joint measurements shall be taken continuously and need not be connected with billing stage. Based on these joint measurements recorded in the register, the Contractor shall submit the bills in both soft and hard copies (three copies) in the prescribed format along with the detailed measurements item wise. All the pages of the measurement sheets shall be serially machine numbered and signed by the Contractor. The bills along with measurement sheet shall be computer generated and also suitably programmed for effecting the necessary corrections easily. The bills shall be accompanied with necessary documents such as abstract of quantities, variation statements, reconciliation of materials, part rate statements indicating the extent of work done, statement of secured advance claimed and fulfilling other statutory obligations such as ESI / PF / Insurance / labour licence etc. Payment against bills for the work done (Subject to necessary deductions) will be made after the verification and certification by the Engineer of the bill submitted by the Contractor.

59.1.4 **COMPLETION CERTIFICATE:** The Works shall be deemed to have been completed in all respects on the day the Engineer certifies that the works have been so completed in accordance with this Contract, takes over the completed Works and issues a certificate to that effect. The Defect Liability Period will start from the said date of completion / handing over of the work.

59.1.5 **FINAL PAYMENTS:** Based on the measurement of Work performed, the Contractor shall submit his final bill for the Works within 3 months of completion of work. The bill shall be based only on Works as measured and at accepted tender rates including rates for any additional or extra work which might have been approved by the Company. All deductions due under the Contract shall be incorporated. The final bill shall be accompanied by:

A) A copy of the Completion Certificate issued by the Engineer.

B) No Claim Certificate" in the prescribed form or a list of claims if any, not included in the final bill with full details.

The Engineer shall examine and certify the final bill for payment after satisfying that the Works have been satisfactorily completed and that all properties, works and things removed or disturbed or damaged in consequence of the Work have been properly replaced and made good and all expenses and demands incurred or made by or on the Company or in respect of any damage or loss by, from or consequence of the Works have been satisfied, all materials have been returned and the site cleared.

59.1.6 SECURED ADVANCE:

75% payment against bills as Secured Advance on the cost of all non-perishable materials brought by the Contractor to Site for use in the Works (excluding chargeable materials issued by the Company) as assessed and approved by the Engineer may be paid, provided the materials confirm to the specifications of the contract an accepted by the Engineer. These materials shall be pledged by the Contractor to the Company. All the Secured Advance allowed will be deducted while making payment of any bill for the work done and a fresh Secured Advance on the materials remaining then at Site will be paid along with the same bill.

59.2 BILL TO BE SUBMITTED MONTHLY:

A bill shall be submitted by the Contractor each month on or before the date by the Engineer for all work executed in the previous month and the Engineer shall take or cause to be taken the requisite measurement for the purpose of having the same verified and the claim, as far as admissible, adjusted if possible, before the expiry of ten days from the presentation of the bill. If the Contractor does not submit the bill within the time fixed as aforesaid, the Engineer may depute his representative to measure up the said work in the presence of the Contractor, whose counter signature to the measurement list will be sufficient warrant, and the Engineer may prepare a bill from such list which shall be binding on the Contractor in all respects.

59.3 BILLS TO BE ON PRINTED FORMS:

The Contractor shall submit all bills on the printed forms to be had on application at the office of the Engineer and the charges in the bills shall always be entered at the rates specified in the tender in the case of any extra work ordered in pursuance of these conditions and not mentioned or provided for in the tender at the rates herein after provided for such work.

Invoice must contain Contractor's GST Registration number, PAN, Bank detail of Contractor, GST Registration number of IREL Factory/ Office, HSN/SAC Code for service rendered.

59.4 RETENTION MONEY (IF PROVIDED FOR SUBMISSION IN THE TENDER):

As and by way of additional security from every progressive on account bill of the Contractor, prescribed percent of the value of the work executed shall be deducted as Retention money and kept as security deposit until the total of the amount so deducted plus the initial security (including the Earnest money) already deposited will equal the prescribed security.

59.5 SET-OFF:

(a) Any sum of money due and payable to the Contractor (including security deposit returnable to him) may be appropriated/ retained/ withheld and/or set off by the Employer or Government against any claim of the Employer or Government or such other person or persons for the payment of a sum of money arising out of or under this contract or other contracts made by Contractor with the employer or Govt. or such other person or persons.

(b) The Employer will be at liberty to recoup any damage/loss suffered as a result of any action on the part of the Contractor.

59.6 DEDUCTIONS FROM CONTRACT PRICE:

All costs, damages or expenses which the EMPLOYER may have paid for which, under the CONTRACT, the CONTRACTOR is liable, will be claimed by the EMPLOYER. All such claims shall be billed by the EMPLOYER to the CONTRACTOR regularly as and when they fall due. Such claims shall be paid by the CONTRACTOR within fifteen days of the receipt of the corresponding bills and if not paid by the CONTRACTOR within the said period, the EMPLOYER may then deduct the amount from any bill due or becoming due by him to the CONTRACTOR under the CONTRACT or may be recovered by action of law or otherwise, if the CONTRACTOR fails to satisfy the EMPLOYER of such claims.

59.7 TAXES APPLICABLE TO CONTRACTOR'S MANPOWER, TURNOVER, EQUIPMENT ETC.

The CONTRACTOR shall be solely responsible for all taxes that may be levied on the CONTRACTOR's turnover & profit or on the earnings of any of his employees or personnel engaged by him and shall hold the EMPLOYER indemnified and harmless against any claims that may be made against the EMPLOYER in this behalf. The EMPLOYER does not undertake any responsibility whatsoever regarding any taxes levied on CONTRACTOR and/or his personnel by Centre/ State/ Local Authorities.

59.8 DEDUCTION OF INCOME TAX AT SOURCE:

Income Tax on the gross amount billed will be deducted from Contractor's bills as per Section 194 (C) of the Income Tax Act. In case of contract for consultancy or professional services Tax deduction at source as per Section 194 J. will be carried out

59.9 OVER PAYMENTS / UNDER PAYMENTS DETECTED DURING TECHNICAL AUDIT:

The Company reserves the right to carry out post-payment audit and technical examination of the running/ final bill including all supporting vouchers etc. The Company also reserves the right to propose recoveries detected by CVC (Central Vigilance Commission) based on their audit and observations of works / bills etc. The Company further reserves the right to enforce recovery of any over payment when detected, notwithstanding the fact the amount of running / final bill may be included by one of the parties as an item of dispute before an arbitrator appointed and notwithstanding the fact that the amount of running / final bill figures in the arbitration award.

If as a result of such audit and technical examination any over payment is discovered in respect of any work done by the Contractor under the contract, the Company from the Contractor shall recover it, or if any under payment is discovered, the amount shall be duly paid to the Contractor by the Company.

60.0 APPROVAL BY MAINTENANCE CERTIFICATE:

No certificate other than the maintenance certificate referred to in **clause 61** here of shall be deemed to constitute approval of any work or other matter in respect of which it is issued or shall be taken as admission of the due performance of the contract or any part here of or of the accuracy of any claim or demand made by the contractor or of additional or varied work having been ordered by the Engineer nor shall any other certificate conclude or prejudice any of the powers of the Engineer.

61.1 MAINTENANCE CERTIFICATE:

The contract shall not be considered as completed until a maintenance certificate shall have been signed by the Engineer and delivered to the Employer stating that the Works have been completed and maintained to his satisfaction. The maintenance certificate will be given by the Engineer twenty - eight days after the expiration of the Period of maintenance (or if different Periods of maintenance shall become applicable to different parts of Works the expiration of the latest such period) or as soon thereafter as any works ordered during such Period pursuant to **Clause 50 and 51** hereof shall have been completed to the satisfaction of the Engineer and full effect given to this Clause notwithstanding any previous entry on the Works of taking possession, working or using thereof or any part thereof by the Employer.

61.2 CESSATION OF EMPLOYER'S LIABILITY

The Employer shall not be liable to the Contractor for any matter or thing arising out of or in connection with the Contract or the execution of the Works Unless the Contractor shall have made a claim in writing in respect thereof before the giving of the maintenance certificate under this Clause.

61.3 UNFULFILLED OBLIGATION:

Notwithstanding the issue of the Maintenance certificate the Contractor and (subject to sub - clause (2) of this clause) the Employer shall remain liable for the fulfilment of any obligation incurred under the provisions of the Contract prior to the issue of the Maintenance Certificate which remains un-performed at the time such certificate is issued and for the purpose of determining the nature and extent of any such obligation, the contract shall be deemed to remain in force between the parties hereto.

62.0 URGENT REPAIRS:

If by reason of any accident or failure or other event occurring to in or in connection with the works or any part thereof either during the execution of the works or during the Period of Maintenances, any remedial or other work or repair shall in the opinion of the Engineer or the Engineer's representative be urgently necessary for security and the Contractor is unable or un-willing at once to do such work or repair, the Employer may by his own or other workmen to such work or repair as the Engineer or the Engineer's representative may consider necessary. If the work or repair so done by the Employer is work which in the opinion of the Engineer the Contractor was liable to do at his own expense under the contract, all cost and charges properly incurred by the Employer in so doing shall on demand be paid by the Contractor to the employer or may be deducted by the employer from any moneys due or which may become due to the Contractor. Provided always that the Engineer or the Engineer's representative (as the case may be) shall, as soon after the occurrence of any such emergency as may be reasonably practicable notify the Contractor thereof in writing.

63.0 RESOLUTION OF DISPUTES/ ARBITRATION:

63.1 The EMPLOYER and the CONTRACTOR shall make every effort to resolve amicably by direct informal, good faith negotiations any disagreement or dispute arising between them under or in connection with the Contract.

63.2 If, after thirty days from the commencement of such informal, good faith negotiations, the EMPLOYER and the CONTRACTOR have been unable to resolve the disagreement or dispute, the same shall be referred for resolution as per the formal mechanism as specified hereunder shall be applicable.

63.3 LEGAL CONSTRUCTION: The Contract shall be, in all respects be construed and operated as an Indian Contract and in accordance with Indian Laws as in force for the time being.

63.4 ARBITRATION:

a) All disputes and differences of any kind whatsoever arising out of or in connection with the contract or carrying out of the works (whether during the course of works or after their completion and whether before or after determination, abandonment or breach of contract) shall be referred to and settled by the person authorized and notified in writing by IREL who shall state his decision in writing. Such a decision may be in the form of a final certificate or otherwise and shall be made within a period of 30 days from the date of receipt of such reference to them.

b) If the CONTRACTOR is dissatisfied with the decision of such authorized person, then he may within 30 days of receipt of such decision send a written appeal to PURCHASER, represented by the Chairman and Managing Director at the registered office, Mumbai for the same to be referred to Arbitration by a Sole Arbitrator to be appointed by mutual consent and after due approval of CMD, IREL. The Arbitration proceedings shall be conducted as per the provisions of the Arbitration and Conciliation Act, 1996. It is made clear that this Arbitration Clause shall be applicable to any and all disputes and differences between the Parties arising out of and/or relating to this CONTRACT and the Parties shall be bound to refer the same to arbitration in accordance with the procedure contemplated herein.

c) If the period of 30 days under Clause (b) has expired at any stage, stipulated in the preceding paras without any response from the CONTRACTOR before such expiry, the CONTRACTOR is deemed to have communicated his satisfaction to the decision of IREL at the relevant stage and all his rights of further appeal or as the case may be, adjudication are deemed to have been waived once and for all.

d) The seat of arbitration will be at ____and the language thereof shall be English**.**

e) Notwithstanding the invocation, commencement and/or pendency any dispute resolution proceedings under this Clause 63 including arbitration under Clause 63.4, the CONTRACTOR shall continue to be bound by the provisions of the CONTRACT, if not terminated by the EMPLOYER,

and shall be obligated to discharge its obligations under the CONTRACT including continuation of the WORK under the CONTRACT.

f) The CONTRACTOR shall not in any way delay or default or cause to delay or default the carrying out of the works by reason of the fact that any matter has been agreed to be referred to and / or referred to dispute resolution under Clause 63 including Arbitration under Clause 63.4.

63.5 JURISDICTION:

The courts only shall, subject to Arbitration Clause, have exclusive jurisdiction to deal with and decide any matter arising out of this contract.

64.0 ACTS OF PARLIAMENT, LOCAL AND OTHER AUTHORITIES AND BYE-LAWS:

64.1 **COMPLYING WITH REGULATIONS:**

64.1.1 Throughout the execution of the WORK, the CONTRACTOR shall comply with the requirements of all applicable laws and regulations, bye-laws or orders made there under and to the requirements of public, municipal and other authorities in any way affecting or applicable to the work. IREL shall, when requested by the CONTRACTOR, give all reasonable assistance to the CONTRACTOR in obtaining information concerning local conditions.

64.1.2 Before making any departure from the specification or drawings which may be necessary to conform to such requirements, the CONTRACTOR shall give the IREL written notice specifying the departure proposed to be made and the reason for making it and applying for instructions thereon. If the CONTRACTOR does not receive such instructions within thirty (30) days, he shall conform to those requirements and inform the IREL accordingly.

64.1.3 The Contractor shall remain liable for the payments of all wages or other money to his employees or labourers under the Minimum Wages Act, Payment of Wages Act, Employees Liability Act, Workmen's Compensation Act, PF and ESI Act or any other enactments and rules made applicable from time to time. The Contractor shall also comply with the provisions of the Apprenticeship Act, Contract Labour Regulation and Abolition) Act and the Rules and Orders issued there under from time to time. The Contractor shall be liable to pay the wages directly to the workmen employed by him on the Works.

64.1.4 It is obligatory on the part of the Contractor to forward the declaration forms to the ESI authorities for issue of ESIC numbers, make timely contribution towards ESI and PF in accordance with the provisions of relevant acts from time to time in respect of labour engaged by him for all the works executed in the Company. The Contractor should contact the jurisdictional ESI and PF authorities and ensure to observe all formalities such as maintenance of muster rolls, opening of identification cards, making remittance etc. The Contractors / firms / establishments shall remit the PF and ESI contributions in their respective codes. However, in such cases, copies of muster roll, wage register, ESI / PF remittance, copies of the returns shall be furnished to the Engineer for verification and records while preferring bills.

64.1.5 The Contractor shall ensure compliance of any other laws, bye-laws, Acts. Statues, Rules & Regulations framed there under as appreciable in relation to its employees/workmen and establishments in mandatorily, even though not explicitly mentioned here. It shall be the responsibility of the Contractor to get itself acquainted about them adequately.

65.0 BREACH OF TERMS, SUSPENSION AND TERMINATION:

65.1.1 BREACH OF TERMS:

Breach of any of the terms of the Contract, the EMPLOYER shall be entitled, without prejudice to any and all other remedies available to it, without incurring any liability what-so-ever, to fore-bear from doing such acts or fulfilling such obligations as are to be done or fulfilled by it here under until the CONTRACTOR on terms herein makes good the said breach;

65.2 SUSPENSION:

65.2.1 IREL may suspend the Works in whole or in part at any time by giving the CONTRACTOR a notice in writing, if the CONTRACTOR shall be in breach of this Contract or shall fail to perform any of its obligations under this Contract, including the carrying out of the Works; provided that such notice of suspension (i) shall specify the nature of the breach or failure, and (ii) shall provide an opportunity to the CONTRACTOR to remedy such breach or failure within a period not exceeding 30 (thirty) days after receipt by the CONTRACTOR of such notice of suspension.

65.2.2 On receiving the notice of suspension from IREL, the CONTRACTOR shall stop all such work, which IREL has directed to be suspended with immediate effect. IREL may at any time cancel the suspension notice for all or any part of suspended work by giving written notice to the CONTRACTOR specifying the part of work to be resumed and the effective date of suspension withdrawal. The CONTRACTOR shall resume the suspended work on immediately upon receipt of such withdrawal of suspension notice. In the event of suspension of work, IREL shall not be liable to the CONTRACTOR for any damage and loss.

65.3 TEMPORARY SUSPENSION:

65.3.1 IREL may at any time temporarily suspend the progress of work being performed under the Contract or any part thereof by notice in writing to the CONTRACTOR. All the work so suspended shall be resumed by the CONTRACTOR and extended as assessed and deemed fit by IREL.

65.3.2 IREL will not pay the CONTRACTOR for any work, which is performed during such an interval of suspension, and IREL shall not be liable to the CONTRACTOR for any damages or loss caused by such suspension of work.

65.4 EVENT OF DEFAULT:

Event of Default means the CONTRACTOR Event of Default or IREL Event of Default or both as the context may admit or require.

65.4.1 **CONTRACTOR EVENT OF DEFAULT**:

Any of the following events shall constitute an event of default by the CONTRACTOR

("CONTRACTOR Event of Default");

a. the CONTRACTOR fails to remedy any breach hereof or any failure in the performance of its obligations hereunder, as specified in a notice of suspension pursuant to Sub-clause

65.2 hereinabove, within 30 (thirty) days of receipt of such notice of suspension or within such further period as IREL may have subsequently granted in writing;

b. The CONTRACTOR fails to commence the Works ;

c. The CONTRACTOR fails to ensure that Works Completion Date of the Plant is achieved as per schedule mentioned in the contract/ agreement;

d. Any representation made or warranties given by the CONTRACTOR under this Contract is found to be false or misleading;

e. The transfer, pursuant to law of either (a) the rights and/or obligations of the CONTRACTOR under the Contract, or (b) all or material part of the CONTRACTOR; except where such transfer in the reasonable opinion of IREL does not affect the ability of the CONTRACTOR to perform, and the CONTRACTOR has the financial and technical capability to perform. its material obligations under the Contract;

f. The CONTRACTOR suspends or abandons the Works without prior consent of IREL, provided that the CONTRACTOR shall be deemed not to have suspended/ abandoned operation if such suspension/ abandonment was (i) as a result of Force Majeure Event and is only for the period such Force Majeure is continuing, or (ii) is on account of a breach of its obligations under the Contract by IREL;

g. the CONTRACTOR becomes insolvent or bankrupt or enters into any agreement with its creditors for relief of debt or take advantage of any law for the benefit of debtors or goes into liquidation or receivership whether compulsory or voluntary;

h. the CONTRACTOR fails to comply with any final decision reached as a result of arbitration proceedings pursuant to Clause 63 hereof;

i. the CONTRACTOR submits to IREL a statement which has a material effect on the rights, obligations or interests of IREL and which the CONTRACTOR knows to be false;any document, information, data or statement submitted by the CONTRACTOR in its Bid, based on which the CONTRACTOR was considered eligible or successful, is found to be false, incorrect or misleading; or

j. The CONTRACTOR repudiates the Contract or otherwise evidences an intention not to be bound by the Contract.

65.4.2 IREL EVENT OF DEFAULT:

The following events shall constitute events of default by IREL (**"IREL Event of Default"),** unless any such IREL Event of Default has occurred as a result of CONTRACTOR Event of Default or due to a Force Majeure Event:

a. IREL is in breach of the Contract and has failed to cure such breach within sixty (60) days of receipt of notice in that behalf from the CONTRACTOR;

b. IREL repudiates the Contract or otherwise evidences an intention not to be bound by this Contract;

c. Any representation made or warranties given by IREL under the Contract is found to be false or misleading.

65.5 **RECOURSE TO EVENT OF DEFAULT:**

65.5.1 In case of an event of default, the following recourse is available to IREL and the CONTRACTOR or both as the situation may warrant:

a. In case of occurrence of Event of Default mentioned in Sub-clause a and Sub-clause b of Clause 65.4.1, the CONTRACTOR shall have an option to ask for extension from IREL specifying the conditions that have restricted the CONTRACTOR to complete the tasks in stipulated time. However, IREL's decision on said matter shall stand final as the case may be;

b. In case of occurrence of any other Event of Default in Clause 65.4.1, IREL shall be entitled to terminate this CONTRACT as per Clause 65.6 herein.

c. In case of occurrence of Event of Default mentioned in Sub-clause 65.4.2, the CONTRACTOR shall have an option to seek Termination of this Contract. In seeking the Termination of the Contract, CONTRACTOR would have to clearly demonstrate that the Event of Default has occurred despite all possible steps taken by CONTRACTOR to avoid Termination. The Parties shall mutually decide the modalities of Termination.

65.6 TERMINATION DUE TO CONTRACTOR EVENT OF DEFAULT:

65.6.1 Without prejudice to any other right or remedy which IREL may have in respect thereof under the Contract, upon the occurrence of an CONTRACTOR Event of Default, IREL shall be entitled to terminate the Contract by issuing a Termination Notice (the **"Termination Notice"**) to the CONTRACTOR, provided that before issuing the Termination Notice, IREL shall by a notice in writing inform the CONTRACTOR of its intention to issue the Termination Notice (the **"Preliminary Notice"**). In case the underlying breach/default is not resolved within a period of sixty (60) days from the date of the Preliminary Notice, IREL shall be entitled, to terminate the Contract by issuing the Termination Notice.

65.6.2 Upon termination of the Contract by notice of either Party to the other pursuant to Sub-clauses 65.5.1 b or 65.5.1 c hereof, the CONTRACTOR shall, immediately upon dispatch or receipt of such notice, take all necessary steps to bring the Works to a close in a prompt and orderly manner and shall make every reasonable effort to keep expenditures for this purpose to a minimum.

65.7 PAYMENT UPON TERMINATION:

65.7.1 Upon termination of this Contract pursuant to Sub-clauses 65.5.1 c hereof, IREL shall make the following payments to the CONTRACTOR (after offsetting against these payments any amount that may be due from the CONTRACTOR to IREL): Remuneration pursuant to Schedule of rates hereof for Works satisfactorily performed prior to the date of termination;

65.8 DISPUTES ABOUT EVENTS OF TERMINATION:

65.8.1 If either Party disputes whether an event specified in Sub-clause 65.4.1 or in Sub-clause

65.4.2 hereof has occurred, such Party may, within 30 (thirty) days after receipt of notice of termination from the other Party, refer the matter to arbitration pursuant to Sub-clause hereof.

66.0 LIMITATION OF LIABILITY:

Notwithstanding anything contrary contained herein, the aggregate total liability of Contractor under the Contract or otherwise shall be limited to 100% of contract price. However, neither party shall be liable to the other party for any indirect and consequential damages, loss of profits or loss of production.

67.0 METHOD OF BLACKLISTING VENDORS:

67.1 Any failure by the vendor (CONTRACTOR) to supply/execute the contract as per order may result in blacklisting of vendor by the authority competent to conclude the contract. The blacklisted vendor shall not be considered for a minimum period of one year from the date of black listing.

67.2 Further, the competent authority may blacklist the bidder, if the bidder changes bid either techno-commercial and / or price or withdraw his bid after receipt of the same and during the validity period of bid.

67.3 Further, the vendor (CONTRACTOR) shall be banned from doing any business with IREL in case of :

a. If security considerations including question of loyalty to the state so warrant.

b. If the proprietor of the firm, its partner or representative is convicted by a court of law following prosecution for offences relating to business dealings.

c. If there is strong justification for believing that the proprietor or employee or representative of the CONTRACTOR has been guilty of malpractice such as bribery, corruption, fraud, substitution of tenders, interpolation, misrepresentation, evasion or habitual default in payment of any tax levied by law, etc.

67.4 An order for ban/ suspension passed for a certain specified period shall be deemed to have been automatically revoked on expiry of that specified period and it will not be necessary to issue a specific formal order of revocation, except that an order of suspension/ban passed on account of doubtful loyalty or security consideration shall continue to remain in force until it is specifically revoked.

67.5 An order of ban on grounds of conviction by Court of Law may be revoked if, in respect of the same facts, the accused has been wholly acquitted by a court of law.

68.0 SECRECY

The CONTRACTOR shall not at any time during the pendency of the contract or there after disclose any information furnished to them by IREL or any drawings, designs, reports and other documents and information prepared by the Contractor for this contract, without the prior written approval of IREL except in so far as such disclosure is necessary for the performance of the Contractor's work and service hereunder.

69.0 LABOUR:

a) In respect of all labour directly or indirectly employed by the Contractor, Labour Rules, on the work, it shall be the bounden duty of the Contractor to abide by and to strictly comply with all labour legislations, as may be applicable, enacted by the parliament or by the State Legislature and the rules/regulations framed thereunder by the Central or State Government or Local Authorities providing for the conditions of employment protection of health, Sanitary arrangements, wages, provident fund, gratuity, welfare, and safety of workmen. These rules and statutory obligations shall be deemed to be part of the Contract. Instructions issued by the Employer in this behalf from time to time shall be equally binding on the contractor & the Contractor shall observe them stringently.

(b) In the event of the Contractor failing to discharge his obligations imposed upon him by or under any statute as aforesaid, the employer shall be entitled to rescind the Contract.at the sole risk and cost of the Contractor and/or recover from him the amount of loss sustained by the Employer.

(c) It is advisable for the Contractor to properly and fully acquaint himself with all the legislations as applicable to his workmen and the work under this contract or in connection herewith, so as to preclude the possibility of infringement and noncompliance thereof and to make it easy for him to observe clause 69 without any deviation.

(d) The Contractor shall maintain records, registers in respect of workers employed by him as required under various statutes and or prescribed by the Employer, shall issue attendance cards to each worker and shall produce the same for inspection on demand to the authorities under statutes or to the authorised representatives of the Employer.

(e) All payments of whatever nature to be made by the Contractor to his workmen shall be made in the presence of an authorised representative of Employer and Employer's representative shall sign the acquaintance in token of having witnessed the payment, as prescribed under law.

(f) The first R.A. bill of the Contractor shall be released only after HRM (Welfare Section) gives clearance regarding compliance of all statutory provisions by the contractor. Final bill of the Contractor shall be cleared only when a clearance certificate is issued by the Contractor from an authority declared for the purpose by the Employer, that the claims of workmen in respect of wages, workmen's compensation, statutory payments etc. have been paid by Contractor to his workmen in full and subject to fulfilment of other conditions of Contract. Labour Rules etc.

(g) The Contractor shall be entirely responsible for safe and good conduct of his employees during the period of his contract. The Contractor shall also ensure, that no safety rules/instructions are violated by him or his workmen. The Contractor shall maintain his machineries and tools for work in safe condition and shall present the same for checking whenever called by Employer/ his representatives.

(h) It shall be binding on the part of the Contractor to familiarise himself and be governed by all statutes such as Mines Act 1952, Rules and Regulations including amendments made thereunder, if any, applicable for the work, Indian Electricity Act. 1910 and Indian Electricity Rules 1956 including amendments, if any. applicable for the work.

(i) The Contractor shall provide and ensure proper use of safety appliances by his workmen throughout the course of their employment.

(j) The Contractor in fulfilment of his statutory obligations imposed by or under various Labour Laws, will among other things:

i) Arrange to provide cool and wholesome drinking water at appointed place/places near work site. The container of water shall be in hygienic condition.

ii) Implement the Employees Provident Fund Scheme or Produce exemption certificate from Regional Provident Fund Commissioner if they are so exempted Otherwise, bills for the work will be released withholding 10% from such sums or as decided by the Management from time to time till such time they implement the scheme or produce exemption certificate from the Regional Provident Fund Commissioner. The Contractors are further required to indemnify Employer against any loss or damage, whatsoever, that may be suffered by Employer as a result of any claim. damage or penalties for any failure or non-compliance on their (Contractor's) part with the provisions of the aforesaid Act and Scheme framed thereunder.

(k) The Contractor shall arrange to get his workmen trained under Mines Vocational Rules-1966 at the Training Department of the Company and shall pay all statutory allowances for such training to his workmen under training. The Contractor shall ensure the proper use of safety appliances by his workmen throughout the course of their employment.

70.0 RETURNS OF LABOUR:

(a) The Contractor shall if required by the Engineer deliver to the Engineer's representative or at his office a return in detail in such from and at such intervals as the Engineer may prescribe showing the numbers of the labour from time to time employed by the contractor on the Site.

71.0 LABOUR LICENCE:

(a) The Contractor shall have to obtain a licence from Asstt. Labour Commissioner (Licensing Authority) within 15 days from the award of the Contract under Contract Labour (Regulation and Abolition) Act. 1970 and shall have to comply with all the provisions of the Act and Rules framed thereunder and shall ensure that no violations are pointed out by the Authorities under the Act.

(b) The RA Bills of the contract shall not be released until the licence for the number of labour employed under Contract Labour(Regulation and Abolition)Act, 1970 has been produced by the Contractor to the office of the employer. Whenever the number is increased, the Contractor shall arrange to get such changes incorporated in the licence.

(c) The Contractor shall make payment to their workmen in the presence of authorised representative of the Employer only, and obtain the required certificate regarding witnessing of payments.

72.0 WOMEN LABOUR:

The working hours of women labour employed by the Contractor/ tenderer shall conform to the relevant labour acts in force. They shall not be detained after 7,00 PM and employed before 6.00 AM and in no case employed during the night time.

73.0 EMPLOYMENT OF CHILDREN:

No child below the age of 18 years shall be employed. If children/young persons in the work premises are employed contravening the provision of the Factories Act, 1948 and rules framed thereunder, their agreement/ contract is liable to cancellation and/or termination without any compensation or notice.

74.0 ENTRY PASS :

All representatives and workers of Contractor shall possess the Entry Pass issued from the Security Deptt. and concerned Officer/Engineer shall have the right to refuse the Entry passes to any worker or representative of the Contractor without assigning any reason. Permission to enter the Plant to any representative or worker of the Contractor may be suspended or withdrawn at any time by the Security Deptt. or concerned Officer/Engineer without assigning any reason. The Contractor(s) shall ensure that any gate pass issued to their workmen or representatives by authorities are not misused by the unauthorised persons for entry in the plant area/in specified area inside the plant.

75.0 SAFE CUSTODY OF ENTRY PASS:

The Contractor shall be governed by the following provisions for enforcing safe custody and proper use of gate passes that may be issued to him for entry into the Plant area:

(a) it shall amount breach of rules and regulations regarding entry into a prohibited place by Contractors in case any entry passes issued on their demand are found to be misused by any unauthorised person (s).

(b) It shall also amount to breach of terms of the contract for which the employer reserves the right to terminate the contract at any stage at the risk and cost of the Contractor.

(c) Final payment would be made to the Contractor only after all the passes issued by the Security Department are surrendered to the Security Department for cancellation for which 'No Demand Certificate' should be obtained.

(d) In case of passes lost/ not surrendered for any reason an amount as fixed shall be levied as penalty before final payments are cleared or as amended from time to time. No Dues Certificate will not be issued unless all the statutory payments to contract labour including retrenchment benefits, gratuity etc. are paid and a copy of full and final payment Muster Roll duly witnessed by the nominee of employer is submitted to Welfare Dept. by the contractor The Contractor may be debarred in case he is found that he is not complying with the statutory provisions.

76.0 LIABILITY FOR ACCIDENTS AND DAMAGES:

76.1 The CONTRACTOR shall be responsible for loss or damage to the PLANT and provide new equipment and machineries in lieu of equipment/machineries lost/ damaged beyond repairs, free of cost until the PLANT is handed over after successful completion of performance guarantee test run.

Notwithstanding the provisions in the CONTRACT, the CONTRACTOR shall not be responsible for any loss or damage to the PLANT or any part thereof if and to the extent that such loss or damage is not covered by insurance coverage such as War risk, provided the same is general exclusion of the policy of the EAR insurance. War Risks shall mean any of the following events occurring within India: War, hostilities, warlike operations (whether a state of war be declared or not), invasion, act of foreign enemy, civil war, rebellion, terrorism, revolution, insurrection, mutiny, usurpation of civil or military government, conspiracy, riot, civil commotion, mine, bomb, shell, grenade or other projectile, missile, munitions or explosive of war.

76.2 The CONTRACTOR shall indemnify the IREL in respect of all damage or injury to any person or to any property (other than property forming part of the Work) and against all actions, suits, claims, demands, costs, charges and expenses arising in connection therewith which shall have been occasioned by the negligence of the CONTRACTOR or any SUB-CONTRACTOR, or by defective design (other than a design made, furnished or specified by the IREL and which the

CONTRACTOR has disclaimed responsibility in writing within a reasonable time after receipt of the IREL's instructions), material or workmanship, any breach of the CONTRACTOR's obligations.

77.0 SAFETY CLAUSES:

Before commencement of the work, the Contractor will give an undertaking in writing that they would abide by the safety Rules and Regulations laid down by the organisation rigorously and any deviation from this would make them liable for action.

(a) SAFETY CLEARANCE :

Along with contract document and job instructions from the contracting department, the Contractor will come to Safety & Training Deptt. where he will be further briefed and Contractor's Safety Management Policy will be explained. The Contractor will not be permitted to start the job without getting a written safety clearance from Safety & Training Deptt.

(b) SHUTDOWNS

The contracting department would take necessary shutdowns wherever there are hazards of gases, electricity, moving machinery, etc. The Contractor shall ensure that the shutdowns/ clearance are taken before sending workers in such locations.

(c) WORK AT HEIGHT

Whenever work at height is involved Contractor should obtain passes to work at height for these persons who will be required to work at height from Safety & Training Deptt.

(d) INJURY TO WORKMEN

The Contractor after preliminary examination at PHC may take his injured workmen to his own Doctor with a permission from the Doctor at PHC at his own risk giving an undertaking to that effect in writing to the Doctor. He will, however, have to keep S&T Deptt. informed about the nature of the injury and the period for which the injured person is off duty on account of injury.

(e) RESPONSIBILITY FOR ACCIDENTS

The Contractor shall be fully, responsible for accidents caused due to his or his agent's or workmen's negligence or carelessness in regard to the observance of the safety requirements and shall be liable to pay compensation for injuries and delay work due to these accidents.

(f) PRECAUTIONS & SUPERVISION:

The Contractor shall take all safety precautions and provide adequate supervision in order to do the job safely and without damage to equipment.

(g) SAFETY CODE

The Contractors shall strictly follow the IREL Safety Code and also the instructions issued by the Safety & Training Deptt. from time to time. Before starting the work, the Contractor shall meet the safety Officer and get himself familiar with the safety measures to be taken during the execution of the job. The contractor shall be personally responsible for the safety of his workmen and shall be liable for prosecution in case of any accident.

(h) OTHER ACTS RULES ETC.

Notwithstanding the above clauses, there is nothing in these conditions to exempt the Contractor from the operations of any other Act or Rule in force in the Republic of India.

(i) FAILURE TO OBSERVE SAFETY RULES:

Failure to observe the safety rules will make the Contractor liable to penalty by way of suspension of work, fine and termination of contract.

(j) SAFE USE OF VEHICLES:

It will be entirely the responsibility of the Contractor to ensure that the vehicles are not driven with so high speed or in so reckless or rash manner as to cause accident or prove to be potential threat to the safety of the traffic. Where the speed limits have been fixed, they will be strictly adhered to by the Contractor's drivers who will also adhere to slow and safe driving inside the Plant and Township Area. Failure to comply with the above may result in termination of the contract.

(k) THEFT ETC.

Similarly, if a driver or any staff of the Contractor is caught in theft case or in any unauthorised movement of materials or in the activity which is punishable under the law or not authorised by the Plant, the Contractor will bear the full responsibility for the loss and other consequences which may result to the Plant due to such illegal/ unauthorised acts besides the action to terminate the contract by the Plant.

(l) COMPENSATION :

In case of accident or injury or damages caused by the Contractor's vehicle or staff to any person or property, the financial responsibility to compensate be borne solely by the Contractor and this amount may, at the discretion of the competent authority of IREL, be recovered from the bills or Security or other deposits of the Contractor.

(m) PRECAUTIONS FOR VEHICULAR TRAFFIC:

Suitable safety precautions must be taken by the Contractor for his vehicular traffic at the level crossing/roads inside the Plant/ Township area. Contractors would be using those roads on their own risk and responsibility without any liability on the part of IREL Management.

78.0 INSURANCE:

78.1 GENERAL:

CONTRACTOR shall at his own expense arrange, secure and maintain insurance with reputed insurance companies to the satisfaction of the EMPLOYER as follows:

CONTRACTOR at his cost shall arrange, secure and maintain insurance as may be necessary and to its full value for all such amounts to protect the WORKS in progress from time to time and the interest of EMPLOYER against all risks as detailed herein. The form and the limit of such insurance, as defined here in together with the under works thereof in each case should be as acceptable to the EMPLOYER. However, irrespective of work acceptance the responsibility to maintain adequate insurance coverage at all times during the period of CONTRACT shall be that of CONTRACTOR alone. CONTRACTOR's failure in this regard shall not relieve him of any of his responsibilities and obligations under CONTRACT.

Any loss or damage to the equipment, during ocean transportation, port/custom clearance, inland and port handling, inland transportation, storage, erection and commissioning till such time the WORK is taken over by EMPLOYER, shall be to the account of CONTRACTOR.

CONTRACTOR shall be responsible for preferring of all claims and make good for the damage or loss by way of repairs and/or replacement of the parts of the Work damaged or lost. CONTRACTOR shall provide the EMPLOYER with a copy of all insurance policies and documents taken out by him in pursuance of the CONTRACT. Such copies of document shall be submitted to the EMPLOYER immediately upon the CONTRACTOR having taken such insurance coverage. CONTRACTOR shall also inform the EMPLOYER at least 60(Sixty) days in advance regarding the expiry, cancellation and/or changes in any of such documents and ensure revalidation/renewal etc., as may be necessary well in time.

Statutory clearances, if any, in respect of foreign supply required for the purpose of replacement of equipment lost in transit and/or during erection, shall be made available by the EMPLOYER. CONTRACTOR shall, however, be responsible for obtaining requisite licences, port clearances and other formalities relating to such import. The risks that are to be covered under the insurance shall include, but not be limited to the loss or damage in handling, transit, theft, pilferage, riot, civil commotion, weather conditions, accidents of all kinds, fire, war risk (during ocean transportation only) etc. The scope of such insurance shall cover the entire value of supplies of equipments, plants and materials to be imported from time to time.

All costs on account of insurance liabilities covered under CONTRACT will be to CONTRACTOR's account and will be included in VALUE OF CONTRACT. However, the EMPLOYER may from time to time, during the currency of the CONTRACT, ask the CONTRACTOR in writing to limit the insurance coverage risk and in such a case, the parties to the CONTRACT will agree for a mutual settlement, for reduction in VALUE OF CONTRACT to the extent of reduced premium amounts.

78.2 CONTRACTOR as far as possible shall cover insurance with Indian Insurance Companies, including marine Insurance during ocean transportation.

i) EMPLOYEES' STATE INSURANCE ACT:

The CONTRACTOR agrees to and does hereby accept full and exclusive liability for the compliance with all obligations imposed by the Employees' State Insurance Act 1948 and the CONTRACTOR further agrees to defend, indemnify and hold EMPLOYER harmless for any liability or penalty which may be imposed by the Central, State or Local authority by reason of any asserted violation by CONTRACTOR or SUB-CONTRACTOR of the Employees' State Insurance Act, 1948, and also from all claims, suits or proceeding that may be brought against the EMPLOYER arising under, growing out of or by reasons of the work provided for by this CONTRACTOR, by third parties or by Central or State Government authority or any political sub- division thereof.

The CONTRACTOR agrees to fill in with the Employee's State Insurance Corporation, the Declaration Forms, and all forms which may be required in respect of the CONTRACTOR's or SUB-CONTRACTOR's employees, who are employed in the WORK provided for or those covered by ESI from time to time under the Contract. The CONTRACTOR shall deduct and secure the agreement of the SUB- CONTRACTOR to deduct the employee's contribution as per the first schedule of the Employee's State Insurance Act from wages and affix the Employees Contribution Card at wages payment intervals. The CONTRACTOR shall remit and secure the agreement of SUB-CONTRACTOR to remit to the State Bank of India, Employee's State Insurance Corporation Account, the Employee's contribution as required by the Act. The CONTRACTOR agrees to maintain all cards and Records as required under the Act in respect of employees and payments and the CONTRACTOR shall secure the agreement of the SUB- CONTRACTOR to maintain such records. Any expenses incurred for the contributions, making contributions or maintaining records shall be to the CONTRACTOR's or SUB-CONTRACTOR's account.

The EMPLOYER shall retain such sum as may be necessary from the total VALUE OF CONTRACT until the CONTRACTOR shall furnish satisfactory proof that all contributions as required by the Employees' State Insurance Act, 1948, have been paid. This will be pending on the CONTRACTOR when the ESI Act is extended to the place of work.

ii) WORKMEN COMPENSATION AND EMPLOYER'S LIABILITY INSURANCE:

Insurance shall be effected for all the CONTRACTOR's employees engaged in the performance of this CONTRACT. If any of the work is sublet, the CONTRACTOR shall require the SUB-CONTRACTOR to provide workman's compensation and employer's liability insurance for the latter's employees if such employees are not covered under the CONTRACTOR's Insurance.

iii) TRANSIT INSURANCE:

In respect of all items to be transported by the CONTRACTOR to the SITE of WORK, the cost of transit insurance should be borne by the CONTRACTOR and the quoted price shall be inclusive of this cost.

iv) COMPREHENSIVE AUTOMOBILE INSURANCE:

This insurance shall be in such a form as to protect the Contractor against all claims for injuries, disability, disease and death to members of public including EMPLOYER's men and damage to the property of others arising from the use of motor vehicles during on or off the `site' operations, irrespective of the Employership of such vehicles.

v) COMPREHENSIVE GENERAL LIABILITY INSURANCE:

a) This insurance shall protect the Contractor against all claims arising from injuries, disabilities, disease or death of member of public or damage to property of others due to any act or omission on the part of the Contractor, his agents, his employees, his representatives and Sub-Contractor's or from riots, strikes and civil commotion.

b) Contractor shall take suitable Group Personal Accident Insurance Cover for taking care of injury, damage or any other risks in respect of his Engineers and other Supervisory staff who are not covered under Employees' State Insurance Act.

c) The policy shall cover third party liability. The third party liability shall cover the loss/ disablement of human life (person not belonging to the Contractor) and also cover the risk of damage to others materials/ equipment/ properties during construction, erection and commissioning at site. The value of third party liability for compensation for loss of human life or partial/full disablement shall be of required statutory value but not less than Rs. 2 lakhs per death, Rs. 1.5 lakhs per full disablement and Rs. 1 lakh per partial disablement

and shall nevertheless cover such compensation as may be awarded by Court by Law in India and cover for damage to others' equipment/ property as approved by the Purchaser. However, third party risk shall be maximum to Rs. 10 (ten) lakhs to death.

d) The Contractor shall also arrange suitable insurance to cover damage, loss, accidents, risks etc., in respect of all his plant, equipments and machinery, erection tools & tackles and all other temporary attachments brought by him at site to execute the work.

e) The Contractor shall take out insurance policy in the joint name of EMPLOYER and Contractor from one or more nationalised insurance company from any branch office at Project site.

f) Any such insurance requirements as are hereby established as the minimum policies and coverages which Contractor must secure and keep in force must be complied with, Contractor shall at all times be free to obtain additional or increased coverages at Contractor's sole expenses.

vi) ANY OTHER INSURANCE REQUIRED UNDER LAW OR REGULATIONS OR BY EMPLOYER:

CONTRACTOR shall also carry and maintain any and all other insurance(s) which he may be required under any law or regulation from time to time without any extra cost to EMPLOYER. He shall also carry and maintain any other insurance which may be required by the EMPLOYER.

79. General

79.1 In the event that terms and conditions stipulated in the General Conditions of Contract should deviate from terms and conditions stipulated in the Contract, the latter shall prevail.

79.2 **LOSSES DUE TO NON-COMPLIANCE OF INSTRUCTIONS**:

Losses or damages occurring to the EMPLOYER owing to the CONTRACTOR's failure to adhere to any of the instructions given by the EMPLOYER in connection with the contract execution shall be recoverable from the CONTRACTOR.

79.3 **RECOVERY OF SUMS DUE**:

All costs, damages or expenses which the EMPLOYER may have paid, for which under the CONTRACT CONTRACTOR is liable, may be recovered by the EMPLOYER (he is hereby irrevocably authorized to do so) from any money due to or becoming due to the CONTRACTOR under this Contract or other Contracts and/or may be recovered by action at law or otherwise. If the same due to the CONTRACTOR be not sufficient to recover the recoverable amount, the CONTRACTOR shall pay to the EMPLOYER, on demand, the balance amount.

79.4 **PAYMENTS, ETC. NOT TO AFFECT RIGHTS OF THE EMPLOYER:**

No sum paid on account by the EMPLOYER nor any extension of the date for completion granted by the EMPLOYER shall affect or prejudice the rights of the EMPLOYER against the CONTRACTOR or relieve the CONTRACTOR of his obligation for the due fulfilment of the CONTRACT.

79.5 **CUT-OFF DATES**:

No claims or correspondence on this Contract shall be entertained by the EMPLOYER/Consultant after 90 days after expiry of the performance guarantee (from the date of final extension, if any).

79.6 **PARAGRAPH HEADING:**

The paragraph heading in these conditions shall not affect the construction thereof.

Annexure I

FORMAT FOR CORRESPONDENCE WITH BIDDERS ON "ETHICS IN TENDERING & OTHER BUSINESS DEALINGS"

Dear Sir,

IREL (India) Limited, a Government of India undertaking under the administrative control of Department of Atomic Energy is doing its business as per the rules and regulation of the Public Sector Undertaking and other statutory agencies. The business is done in an ethical, rational & impartial manner with good corporate governance.

In our endeavour to be more transparent in our dealings and to support our ideology all **Vendors, Customers and Business Partners** are requested not to provide any gift and / or inducement to any of our employees for securing / being granted favour in dealings with our Company. In assurance of your commitment to the aforesaid, it will be highly appreciated if you fill up, sign and abide by the attached undertakings.

Report of any gifts and / or inducements sought by any employee of the company should be immediately reported to any one of the following:

Chairman & Managing Director IREL (India) Limited 1207, V.S. Marg, Prabhadevi Mumbai 400 028. Ph: 022-24225778 Email:cmd@irel.co.in	Chief Vigilance Officer IREL (India) Limited 1207, V.S. Marg, Prabhadevi Mumbai 400 028 Ph:022-24221068 Email:cvo@irel.co.in

We assure you that complaints if any made by you on the subject will be kept confidential and fair investigation will be conducted and appropriate action will be taken. Similarly, we except your commitment to the undertaking and its violation will have consequences as per prevailing rule of the Company.

Thanking you,

For IREL (India) Limited

Name ----------

Designation ----------

Date

Annexure II

FORMAT FOR UNDERTAKING TO BE SUBMITTED BY BIDDERS FOR ADOPTING ETHICAL PRACTICES

Date:

To,

M/s IREL (India) Limited,
1207, V.S. Marg, Prabhadevi
Mumbai 400 028.

I / We …..... am / are a Vendor / Customer of IREL (India) Limited (now onwards to be referred as Company).

I / We agree and undertake:

Not to provide any gift and / or inducement to any employee of the Company in connection with securing / being granted favour (s) in my / our dealings with the Corporate office of the company and / or its any field units namely MK, Chavara, OSCOM, RED, IRERC, REPM & RETTP.

To immediately report any gift and / or inducement sought by any employee of the Company granting favour(s) to me / us in my / our dealings with the Company and / or its field units.

Signature……..

Name……..

Title……..

Name of the Company and Address (with Seal)……..

Annexure III

TENDER ACCEPTANCE LETTER

(To be given on Company Letter Head)

Date:

To,

DGM –Technical (Projects) & I/c Purchase
IREL (India) Limited
Corporate Office Mumbai
PLOT NO. 1207, VEER SAVARKAR MARG
NEAR SIDDHIVINAYAK TEMPLE
PRABHADEVI
MUMBAI-400028

Sub: Acceptance of Terms & Conditions of Tender.
Tender Reference No: _____

Name of Tender/Work: -

Dear Sir,

1. I/ We have downloaded / obtained the tender document(s) for the above mentioned 'Tender/Work' from the website(s) namely:

CPP Portal as per your advertisement, given in the above mentioned website(s).

2. I / We hereby certify that I / we have read the entire terms and conditions of the tender documents from Page No._____to___(including all documents like annexure(s), schedule(s), drawings etc.,), which form part of the contract and I / we shall abide hereby by the terms / conditions / clauses contained therein.

3. The corrigendum(s) issued from time to time by your department/ organization too has also been taken in to consideration, while submitting this acceptance letter.

4. I / We hereby unconditionally accept the tender conditions of above mentioned tender document(s) /corrigendum(s) in its totality/ entirety.

5. I/We do hereby declare that our Firm has not been blacklisted/debarred by any Govt. Department/Public sector undertaking.

6. I / We certify that all information furnished by our Firm is true & correct and in the event that the information is found to be incorrect/untrue or found violated, then your department/ organization shall without giving any notice or reason therefore or summarily reject the bid or terminate the contract, without prejudice to any other rights or remedy.

Yours Faithfully,

(Signature of the Bidder, with Official Seal)

Annexure IV

FORMAT FOR CERTIFICATE FROM PRACTICING CHARTERED ACCOUNTANT FOR ELIGIBLE WORKS

Certificate from the practicing chartered accountant

Based on its books of accounts and other published information authenticated by it, this is to certify that …….. (name of the Bidder) was awarded by …….. (title of company) for ……. (name of supply/work).

The total fees received by the Bidder for the supply/work is ……

We further certify that the said supply/work was completed on …….. (date).

Name of the audit firm:

Seal of the audit firm:

Date:

License/registration no:

UDIN NO.

(Signature, name, designation of the authorized signatory of the audit firm)

Signature of Authorised Signatory with seal

Annexure V

PARTICULARS OF THE BIDDER

Sl.	Particulars	Details
1.	a) Name of Bidder b) Legal status (e.g. incorporated private company, unincorporated business, partnership etc.): c) Date of incorporation and/ or commencement of business d) Brief details about main line of business.	
2.	Bank details: - The payments to be released from IREL will be made through e-payments. The contractor has to provide the following details: • Beneficiary name: • Account Number: • Name of the bank: • IFSC: • Nature of Account (Savings/Current/CC/OD): Branch Code	
3.	Particulars of individual(s) who will serve as the point of contact/ communication for the Bidder a) Name b) Designation c) Company d) Address e) Telephone Number f) Email address	
4.	Particulars of the Authorized Signatory of the Bidder a) Name b) Designation c) Company d) Address e) Telephone Number f) Email address	
5.	GST and PAN no details:	

Annexure -VI

REQUIREMENT DETAILS OF TENDER DOCUMENTS

Note: The complete bid document submitted by the bidder as technical bid (Part 1) shall be duly numbered in each page. Based on the numbering done, the following table should be filled up by the bidder.

Sl.	Required Documents	(bidder should correctly fill the following column)	(Indicate page number of the bid document where related information is shown/available, so that it can be verified by IREL)
1.0	Complete documents as per the pre-qualification criteria a. WO and completion certificate or other relevant details b. financial capability c. Valid MPPWD contractor registration		
2.0	Particulars of the bidder		
3.0	Technical specification and detailed data sheet of civil work to be done in bidders letter head.		
4.0	Annexures I to VI, XI		
5.0	Earnest Money Deposit (EMD)		

Annexure VII

EMD DECLARATION

I have furnished a sum of Rs. 39,251/- (Rupees thirty-nine thousand two hundred fifty-one only) towards EMD vide NEFT/RTGS/BG No……. dated……

Place:
Signature of tenderer:

Full Address:

IREL Bank Details

Name of the Bank	HDFC Bank Limited, V S Marg, Opp. Siddhivinayak Temple, Prabhadevi, Mumbai – 400028
Account Type	Current Account
Account Number	00122320000135
IFSC Code	HDFC0000012

Details of payment to be uploaded to purchase-ho@irel.co.in

Email should contain the following details

1) Name of the company
2) Transaction ID with details Bank and Branch

Annexure VIII

PROFORMA FOR BANK GUARANTEE FOR EARNEST MONEY DEPOSIT

(To be issued by approved Scheduled Banks)

In accordance with Bid No._____ Dated _____ for the work of _____ (herein after referred to as "the said Works") for Rs._____ (Rupees_____ only), under _____ (Corporate Office) of M/s IREL (India) Limited, a company incorporated under Indian Companies Act, having its registered office at Plot No.1207, ECIL building, Opp. to Siddhivinayak Temple, Veer Savarkar Marg, Prabhadevi, Mumbai – 400028, India (herein after referred to as IREL), M/s _____ Address _____ [Herein after referred to as Contractor (s)] wish /wishes to participate in the said tender and a Bank Guarantee for the sum of Rs._____ (in words) valid for a period of _____ days (in words) is required to be submitted by the Bidder towards the Bid Security.

We the _____Bank (hereinafter called the said Bank) do hereby undertake to pay to IREL, the sum of Rs. _____ (Rupees _____ only) by reason of the said tenderer's failure to enter into an agreement of contract on intimation of acceptance of his tender and/or to commence the contract works and/or failure to deposit the security deposit within the stipulated period as per the terms and conditions relating to and/or governing the contract and/or specified in the Bid. We also agree that any such demand made on the Bank shall be conclusive as regards the amount due and payable by the Bank under this Guarantee. We also agree that notwithstanding any dispute or difference or any litigation in respect of or arising from the said contract and/or the acceptance of the tender of the tenderer afore stated by IREL including the question as to the tenability of the claim of the IREL for forfeiting the Earnest Money being the Bank Guarantee herein, we shall forthwith pay the said amount to IREL on demand being made as aforesaid.

We _____ Bank further agree that the guarantee herein contained shall remain in full force and effect during the period that would be taken for entering into an Agreement of contract and that it shall continue to be enforceable till all the dues of the IREL under the terms and conditions of the Bid for the work have been fully paid and its claims satisfied or discharged or till IREL certifies, that the terms and conditions of the bid have been fully and properly carried out by the said tenderer and accordingly discharges the guarantee.

We _____ Bank further agree with the IREL that the IREL shall have the fullest liberty without our consent and without affecting in any manner our obligations hereunder to vary any of the terms and conditions of the Bid and/or terms and conditions governing the contract or to extend the time of validity of the offer from the said tenderer from time to time or to postpone for any time or from time to time any of the powers exercisable by the IREL against the said tenderer and to forbear or enforce any of the terms and conditions of the Bid and we shall not be relieved from our liability hereunder by reason of any such variation, or extension being granted to the said tenderer or for any forbearance, act or omission on the part of the IREL or any indulgence by the IREL to the said tenderer or by any such matter or thing whatsoever which under the law relating to surety/guarantee would but for this provision have effect of so relieving us.

We _____Bank do hereby further agree that any change in the Constitution of the said tenderer or the Bank will not affect the validity of this guarantee.

We _____ Bank lastly undertake not to revoke this guarantee during its currency except with the previous consent of the IREL in writing.

Notwithstanding anything to the contrary contained herein before:
(i) Our Liability under this Bank Guarantee shall not exceed and restricted to Rs …… (in words)
(ii) This Bank Guarantee shall be valid upto ……, unless extended on demand.
(iii) The bank is liable to pay the guaranteed amount or any part thereof under this bank Guarantee only if IREL serve a written claim or demand on or before …… (Three months from the expiry of Guarantee period)

Dated the _____ day of _____ 20--

_____Bank

(Signature with name in Block letters with designation,
Attorney as per power of Attorney No._____dt. _____)

Bank’s Common seal

Annexure IX

PROFORMA FOR BANK GUARANTEE FOR SECURITY DEPOSIT (TO BE ISSUED FROM A SCHEDULED BANK)

WHEREAS on or about the_____ day of_____ M/s _____(Tenderer's name & address), having its registered office situated at _____(Postal address) (herein after referred to as 'The Tenderer') entered into a contract bearing reference no. _____dtd._____ with (MK unit/Chavara unit/OSCOM unit/ RED unit/Corporate Office) of M/s IREL (India) Limited, a company incorporated under Indian Companies Act having its registered office at Plot No.1207, ECIL building, Opp. to Siddhivinayak Temple, Veer Savarkar Marg, Prabhadevi, Mumbai – 400 028, India (herein after referred to as IREL), for _____(details of order) (herein after referred to as 'The Contract').

AND WHEREAS under the terms and conditions of the contract the tenderer is required to keep with IREL a security deposit of Rs._____ (Rupees_____ only) or submit a Bank Guarantee in lieu of cash deposit for the fulfilment of the terms and conditions of the contract, and whereas the supplier has chosen to submit a Bank Guarantee till completion of the guarantee period.

We _____Bank do hereby undertake to pay the amounts due and payable under this Guarantee without any demur, merely on a demand from IREL stating that the amount claimed is due by way of loss or damage caused to or that would be caused to or suffered by IREL by reason of breach of any of the terms and conditions of the said contract. Any such demand made on the bank shall be conclusive as regards the amount due and payable by the Bank under this Guarantee. The payment will be released within three working days from the date of demand for payment.

We undertake to pay to IREL any money so demanded notwithstanding any dispute or disputes raised by the tenderer in any suit or proceeding pending before any court or tribunal relating thereto, our liability under these present being absolute and unequivocal.

The payment so made by us under this guarantees shall be valid discharge of our liability for payment thereunder and the tenderer shall have no claim against us for making such payment.

We _____Bank further agree that the Guarantee herein contained shall remain in full force and effect during the period that would be taken for the performance of the said Agreement and that it shall continue to be enforceable till all the dues of IREL under or by virtue of the said Agreement have been fully paid and its claims satisfied or discharged or till IREL certifies that the terms and conditions of the said Agreement have been fully and properly carried out by the said tenderer and accordingly discharges this Guarantee. Our Guarantee shall remain in force until _____and unless a demand or claim under this guarantee is made on us in writing within three months from the expiry of the Guarantee period, we shall be discharged from all liability under this Guarantee thereafter.

We_____ Bank, further agree that IREL shall have the fullest liberty without our consent and without affecting in any manner our obligations hereunder to vary any of the terms and conditions of the said Agreement or to extent time of performance by the said tenderer from time to time or to postpone for any time or from time to time any of the powers exercisable by IREL against the said tenderer and to forbear or enforce any of the terms and conditions relating to the said Agreement and we shall not be relived from our liability by reason of any such variation, or extension being granted to the said contract or for any forbearance, act or omission on the part of IREL or any indulgence by IREL to the said tenderer or by any such matter or thing whatsoever which under the law relating to sureties would but for this provision, have effect of so relieving us.

This guarantee will not be discharged due to the change in the constitution of the Bank or the Consultant.

We_____ Bank lastly undertakes not to revoke this guarantee during its currency except with the previous consent of IREL in writing.

Notwithstanding anything to the contrary contained herein before :

(i) Our Liability under this Bank Guarantee shall not exceed and restricted to Rs …… (in words)

(ii) This Bank Guarantee shall be valid upto ……, unless extended on demand.

(iii) The bank is liable to pay the guaranteed amount or any part thereof under this bank Guarantee only if IREL serve a written claim or demand on or before …… (Three months from the expiry of Guarantee period)

Dated the_____ day of _____20___

_____Bank

(Signature with name in Block letters with designation, Attorney as per power of attorney No._____ dt _____)

Bank’s Common seal

Annexure X

PROFORMA FOR BANK GUARANTEE AGAINST PERFORMANCE

(To be issued by approved Scheduled Banks)

WHEREAS on or about the _____ day of _____M/s _____ (Tenderer's name & address), having its registered office situated at _____(Postal address) (herein after referred to as 'The Tenderer') entered into a contract bearing reference no. _____ dtd. _____ with _____ (MK unit/Chavara unit/OSCOM unit/RED unit/Corporate Office) of M/s IREL (India) Limited, a company incorporated under Indian Companies Act having its registered office at Plot No.1207, ECIL building, Opp. to Siddhivinayak Temple, Veer Savarkar Marg, Prabhadevi, Mumbai – 400 028, India (herein after referred to as IREL), for _____ (details of order) (herein after referred to as 'The Contract').

AND WHEREAS the Work Order provides that the tenderer shall furnish a Bank Guarantee for Rs._____ (Rupees _____ only) being ____% (_____percent) of the total Work Order value as Guarantee for the due fulfillment by the tenderer of the terms and conditions contained in the Work Order, the guarantee remaining valid till the completion of the guarantee period.

We _____ Bank do hereby undertake to pay the amounts due and payable under this Guarantee without any demur, merely on a demand from IREL stating that the amount claimed is due by way of loss or damage caused to or that would be caused to or suffered by IREL by reason of breach by the said tenderer of any of the terms or conditions contained in the said Work Order or by reason of the Bidder's failure to perform the said Work Order. Any such demand made on the bank shall be conclusive as regards the amount due and payable by the Bank under this Guarantee. However, our liability under this Guarantee shall be restricted to an amount not exceeding Rs. _____ (Rupees _____ only).

We undertake to pay to IREL any money so demanded notwithstanding any dispute or disputes raised by the tenderer in any suit or proceeding pending before any court or tribunal relating thereto, our liability under these presents being absolute and unequivocal.

The payment so made by us under this guarantees shall be valid discharge of our liability for payment thereunder and the tenderer shall have no claim against us for making such payment.

We _____ Bank further agree that the Guarantee herein contained shall remain in full force and effect during the period that would be taken for the performance of the said Work Order and that it shall continue to be enforceable till all the dues of IREL under or by virtue of the said Work Order have been fully paid and its claims satisfied or discharged or till IREL certifies that the terms and conditions of the said Work Order have been fully and properly carried out by the said bidder and accordingly discharges this Guarantee.

We also agree that the amount will be paid by us to the IREL within three working days from the date of demand for payment till the actual date of payment made by us.

Our Guarantee shall remain in force until and unless a demand or claim under this guarantee is made on us in writing within six months from the expiry of the Guarantee period, we shall be discharged from all liability under this Guarantee thereafter.

We _____ Bank, further agree that IREL shall have the fullest liberty without our consent and without affecting in any manner our obligations hereunder to vary any of the terms and conditions of the said Work Order or to extent time of performance by the said tenderer from time to time or to postpone for any time or from time to time any of the distributions exercisable by IREL against the said tenderer and to forbear or enforce any of the terms and conditions relating to the said Work Order and we shall not be relived from our liability by reason of any such variation, or extension being granted to the said tenderer or for any forbearance, act or omission on the part of IREL or any indulgence by IREL to the said tenderer or by any such matter or thing whatsoever which under the law relating to sureties would but for this provision, have effect of so relieving us.

This guarantee will not be discharged due to the change in the constitution of the Bank or the bidder.

We_____ Bank lastly undertakes not to revoke this guarantee during its currency except with the previous consent of IREL in writing.

Notwithstanding anything to the contrary contained herein before :

(a) Our Liability under this Bank Guarantee shall not exceed and restricted to Rs …… (in words)

(b) This Bank Guarantee shall be valid upto ……, unless extended on demand.

(c) The bank is liable to pay the guaranteed amount or any part thereof under this bank Guarantee only if IREL serve a written claim or demand on or before …… (Three months from the expiry of Guarantee period)

Dated the _____ day of _____ 20_

_____Bank

(Signature with name in Block letters with designation,
Attorney as per distribution of Attorney No._____dt. _____)

Bank's Common seal

Annexure-XI

DECLARATION – NON-BLACKLISTING

(To be submitted by an Authorized Signatory on the company's original letter head with signature and seal)

To,
DGM -Technical (Projects) & I/c Purchase
IREL (India) Limited
Corporate Office Mumbai
PLOT NO. 1207, VEER SAVARKAR MARG
NEAR SIDDHIVINAYAK TEMPLE
PRABHADEVI
MUMBAI-400028

Sir,
In response to the Bid Ref No.: _____ dated _____ 2026 for _____ at IREL , I/We hereby declare that presently our agency has not been declared ineligible or black listed for corrupt & fraudulent practices either indefinitely or for a particular period of time by any State Govt./ Central Govt./PSU/Government of India Society on the date of bid submission.

If this declaration is found to be incorrect then without prejudice to any other action that may be taken, my/ our bid if any, to the extent accepted may be cancelled.
Thanking you,
Yours faithfully,

Name of the agency : -
Authorized Signatory: -
Seal of the Organization: -

Date:
Place:

Annexure-XII

Price bid format

S.No.	Description Of Item	Unit	Quantity	Price	GST @%	Total Amt
1	Earth work in excavation by mechanical means (Hydraulic excavator) / manual means over areas including dressing of sides and ramming of bottom disposal of excavated earth, lead up to 50m and lift up to 1.5m, disposed earth to be levelled and neatly dressed. (No extra lift is payable if work is done by mechanical means) All kinds of soil	CUM	16.80			
2	Providing and laying in position cement concrete of specified grade excluding the cost of centering and shuttering - All work upto plinth level : M-15 – Grade concrete	CUM	2.10			
3	Providing and laying in position specified grade of reinforced cement concrete (nominal / design mix with 20mm nominal size graded stone aggregate) excluding the cost of centering, shuttering, finishing and reinforcement - All work up to plinth level : M-20 Grade Concrete	CUM	7.14			
4	Centering and shuttering in cluding strutting, propping etc. and removal of form for: Foundations, footings, bases of columns, etc. for concrete upto plinth level	SQM	42.00			
5	Providing and fixing mild steel round holding down bolts with nuts and washer plates complete.	KG	242.73			
6	Structural steel work in single section fixed with or without connecting plate including cutting, hoisting, fixing in position and applying a priming coat of approved steel primer all complete as per drawing and direction of EIC.	KG	492.35			
7	Steel work in built up M.S. tubular section (round, square or rectangular hollow tubes etc.) trusses/frame work etc. including cutting, hoisting, fixing in position and applying a priming coat of approved steel primer, including welding and bolted with special shaped washersetc. Complete as per drawing and direction of EIC. Hot finished welded type tubes	KG	12712.50			
8	Providing and fixing precoated galvanised iron profile sheets (size, shape and pitch of corrugation as approved by Engineer-in-charge) 0.50 mm + 0.05 %, total coated thickness with zinc coating 120 gsm as per IS: 277 in 240 mpa steel grade, 5-7 microns epoxy primer on both side of the sheet and polyester top coat 15-18 microns. Sheet should have protective guard film of 25 microns minimum to avoid scratches while transportation and should be supplied in single length upto 12 mtr or as desired by Engineer-in-charge. The sheet shall be fixed using self-drilling /self-tapping screws of size (5.5x 55mm) with EPDM seal, complete upto any pitch in horizontal/ vertical or curved surfaces excluding the cost of purlins, rafters and trusses and including cutting to size and shape wherever required as per drawing and direction of EIC.	SQM	508.50			
9	Finishing walls by any mechanical or manual means with Deluxe Multi surface paint system for interiors and exteriors using Primer as per manufacturers specifications : Painting Steel work with Deluxe Multi Surface Paint to give an even shade. Two or more coat applied @0.90 ltr/10 sqm over an under coat of primer applied @ 0.80 ltr/ 10 sqm of approved brand or manufacture.	SQM	206.69			

Note: No price bid is to be submitted along with part 1 (techno-commercial) otherwise bid will be considered void.

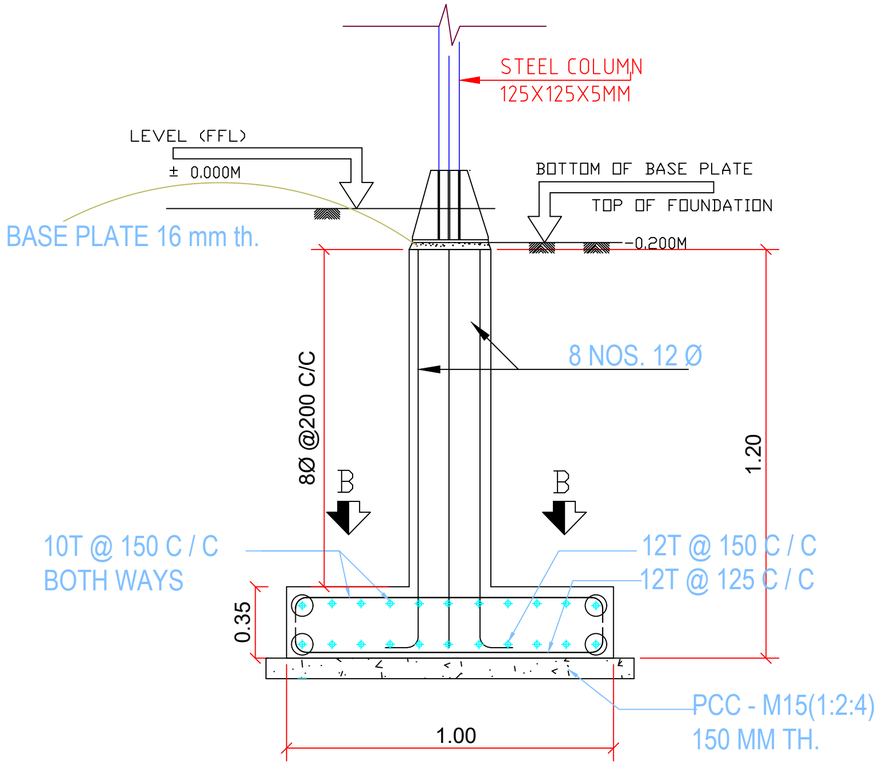

SECTION A-A

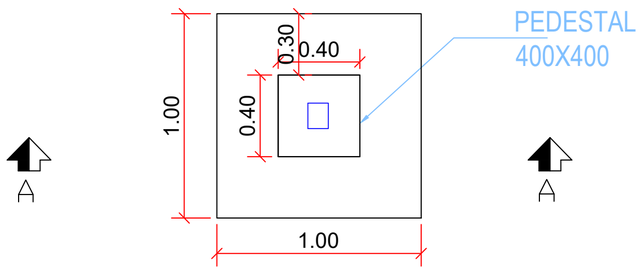

PLAN

DETAIL OF FOOTING

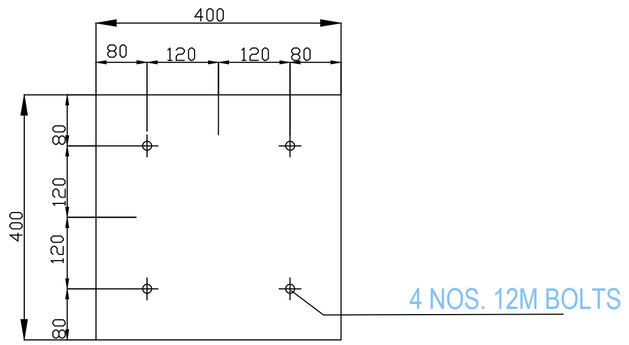

TYPICAL PLAN FOR FOUNDATION BOLT LOCATION

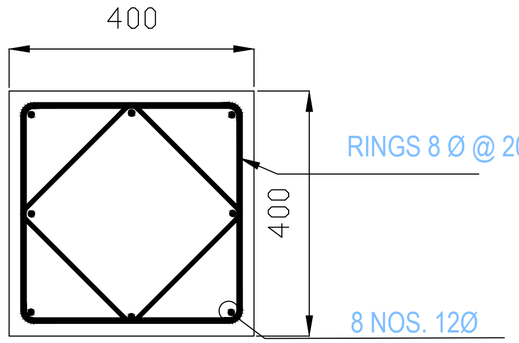

SECTION B - B
PEDESTAL 400X400

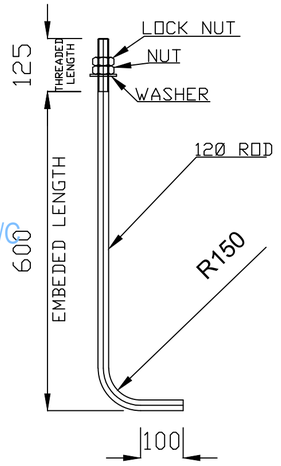

TYPICAL FOUNDATION BOLT DETAILS

NOTES:-

(A):- FOR STEEL SECTION

1. ALL STEEL MEMBER SHALL BE Yst. 310 (fe 450) GRADE UNLESS NOTED OTHERWISE.
2. ALL STRUCTURAL STEEL WORKS SHALL BE IN ACCORDANCE WITH I.S 800 "CODE OF PRACTICE FOR CONSTRUCTION IN STEEL."
3. ALL MATERIALS SHALL BE FINISHED STRAIGHT AND SHALL BE MACHINED TRUE WHERE SO SPECIFIED.
4. ALL HOLES AND EDGES SHALL BE FREE FROM LOOSE POCKETS SCALING AND BURRS.
5. TOLERANCE FOR VARIOUS ELEMENTS SHALL BE AS PER SPEC. AND RELEVANT B.I.S CODES.
6. FABRICATION DRAWING SHALL GET APPROVED FROM THE STRUCTURE CONSULTANTS BEFORE EXECUTION.
7. FABRICATION DRAWING AND METHODOLOGY OF ERECTION OF TRUSS SHOULD BE APPROVED FROM THE STRUCTURE CONSULTANTS.

(B):- FOR WELDING

1. ALL FILLET WELD SHALL BE 5MM. UNLESS NOTED OTHERWISE.
2. DIA OF ELECTRODE ROD USED SHALL BE AS/IS CODE 814
3. LENGTH OF THE ELECTRODE SHOULD BE 450MM ±6MM .
4. THE CONTACT END OF THE ELECTRODE SHALL BE BARE END CLEAN TO A LENGTH OF 20 TO 30MM .
5. THE FLUX COVERING SHALL BE OF UNIFORM IN OUTSIDE DIAMETER AND THICKNESS .
6. THE COVERING SHALL BURN OR FUSE EVENLY.
7. A DEEP PENETRATION ELECTRODES SHALL PROVIDED AS/IS CODE
8. ALL WELDING SHALL BE AS PER I.S 820 CODE OF PRACTICE FOR THE USE OF WELDING IN TUBULAR CONSTRUCTION.
9. ALL PAINTING WORKS SHALL CONFIRM TO I.S 1477 PART-I & II AND I.S 8629.
10. WELDING STRENGTH SHALL BE CHECKED AT SITE AS PER WELDING CODE AND AS/CPWD SPECIFICATION.

PROJECT :-	BUILDING TYPE :- **MAIN BUILDING ADMINISTRATIVE BUILDING**	SUB TITLE :- **PARKING**	ARCHITECT:
	DRAWING TITLE :- PARKING SHED FOUNDATION DETAIL	DEALT BY :- / CHECKED BY :-	North / SCALE.:- N.T.S.:- / REVISION-

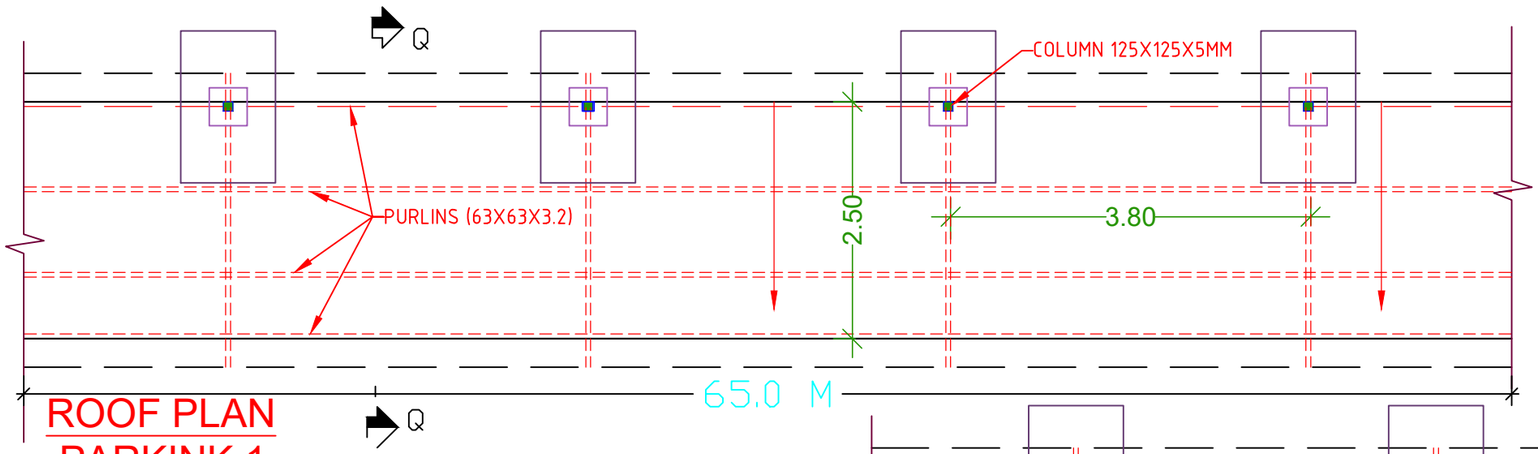

ROOF PLAN PARKINK 1

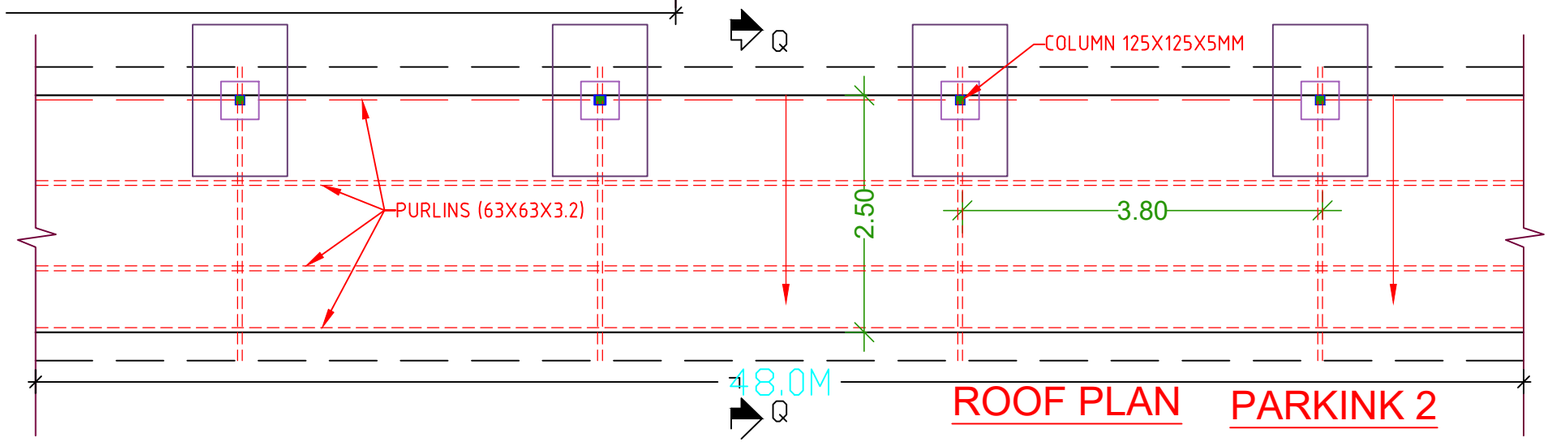

ROOF PLAN PARKINK 2

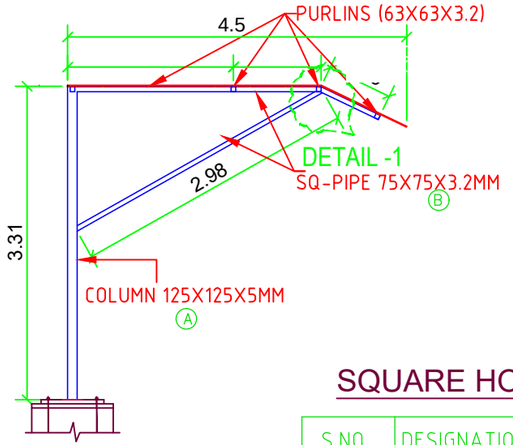

SECTION Q - Q

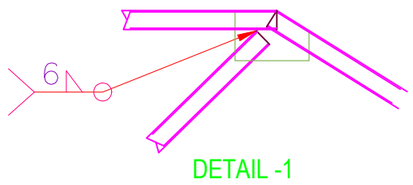

SQUARE HOLLOW PIPE SECTION

S.NO.	DESIGNATION	DEPTH OR WIDTH MM	THK. MM	WEIGHT KG/M
A	125X125X5 MM	125	5.0	18.33
B	75X75X3.2 MM	75	3.2	7.01
C	63X63X3.2 MM	63	3.2	5.85

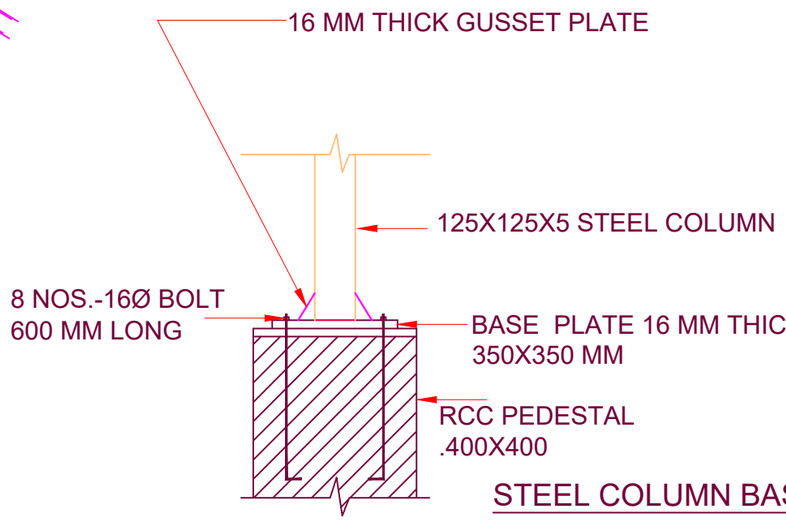

STEEL COLUMN BASE DETAIL

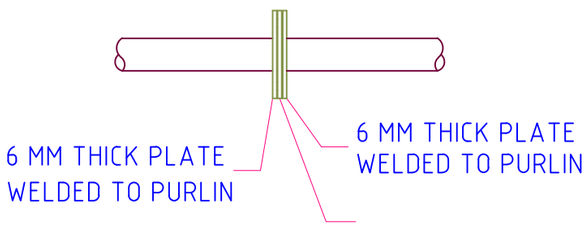

PURLIN JUNCTION

PROJECT :-	BUILDING TYPE :- **MAIN BUILDING ADMINISTRATIVE BUILDING**	SUB TITLE :-	ARCHITECT:
	DRAWING TITLE :- PARKING SHED DETAIL	DEALT BY :- / CHECKED BY :-	North (N) / SCALE.:- N.T.S.:- / REVISION-